THIS DRG. SUPERSEDES DRG. No. 20-06-24
ISSUE 1386-81 VIDE AUTHY. NOTN. No. 03-86.

20-06-24

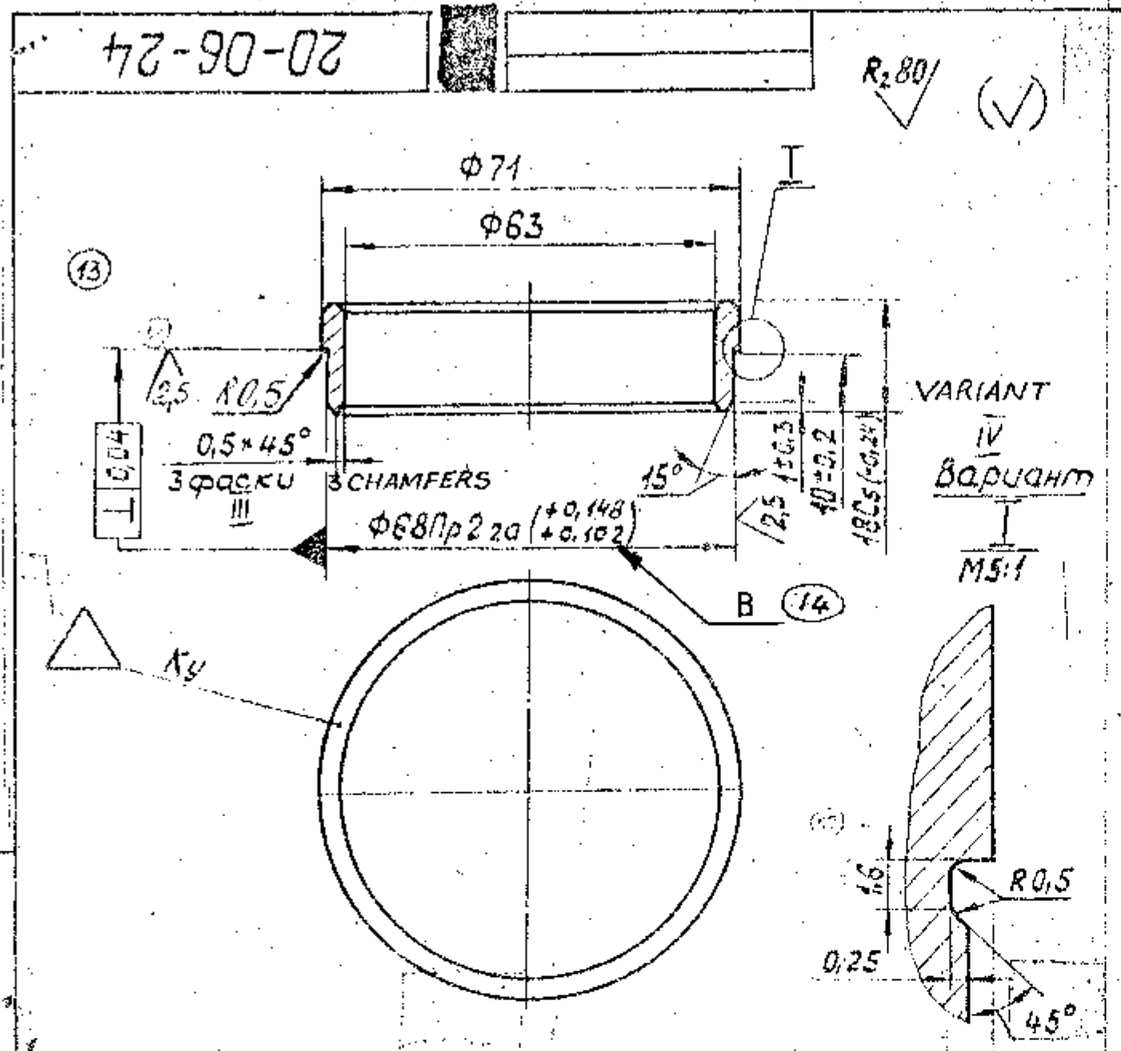

II TECHNICAL REQUIREMENTS – IN RUSSIAN

1. Заменитель материала сталь 12Х18Н9Т ГОСТ 5632-72.

2. Неуказанные предельные отклонения размеров: отверстий – по A_7; валов – по B_7; остальных – по CM_8.

13	1	ГОСТ 5632-72		
11	3			
10				
9				
			Разраб.	Дата
			п/п	
			п/п	
			п/п	
			п/п	
			п/п	

(14A) EQUIVALENT MATERIAL
04Cr.18 Ni 10 Ti 20 TOIS:6911-72

TECHNICAL REQUIREMENTS – TRANSLATED

1. MATERIAL SUBSTITUTE IS 12X18H9T GOST 5632-72.

2. NON-INDICATED LIMIT DEVIATIONS OF DIMENSIONS ARE OF HOLES BY A_7, SHAFTS BY B_7, THE REST BY CM_8.

(14) 3. CHECK "B" DIMENSION IN TWO SURFACES AS ARITHMETIC MEAN FROM ACTUAL DIMENSIONS, WITH THAT TOLERANCE FOR ROUNDNESS (OVALITY) SHOULD BE NOT MORE THAN 0.2 mm.

** (14B) CQA(HV)5.06.605E
CQA(HV)5.06.609E

PILOT SAMPLE SHOULD BE APPROVED BY A.H.S.P BEFORE BULK PRODUCTION

14B	15.7.15	Pt.11 of 7th Alt.Comm. Meeting Dt.11.4.12	EST MASS 0,085 kg	TO BE STAMPED OR MARKED WHERE INDICATED THUS (LETTERS)
14A	28.8.10	4th Alt Comm Mtg Minutes Point No.16 Dt.26.10.09	ALL SHARP EDGES AND CORNERS TO BE REMOVED UNLESS OTHERWISE STATED MACHINED CORNERS TO HAVE R OUTSIDE R INSIDE EQUIVALENT CHAMFERS ARE PERMISSIBLE	
14	13.7.89	Notn. No. 813-86		
ISSUE	DATE	NATURE OF AMENDMENTS		
DRN		SCALE:- 1 : 1	MATERIAL:- 12X18H10T GOST 5632-72	USED ON:- Cδ 20-06-01-5 Cδ 20-06-02-5 **
CHD		DIMENSIONS IN mm		
TED		TOLERANCE ON DIMNS UNLESS OTHERWISE STATED	CONTROLLERATE OF INSPECTION (HEAVY VEHICLES) AVADI	
APPD			TITLE:- SCREEN	
DATE	07.9.87	ALL THREADS CONFORM 10	D S CAT NUMBER	DRAWING NUMBER 20-06-24