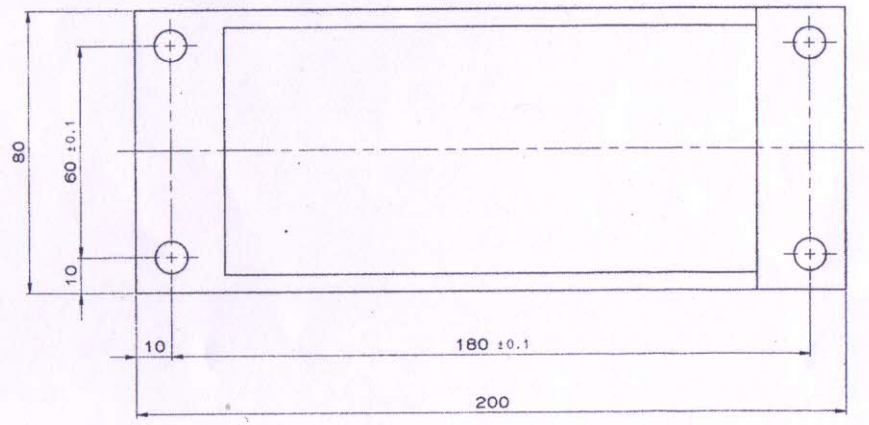

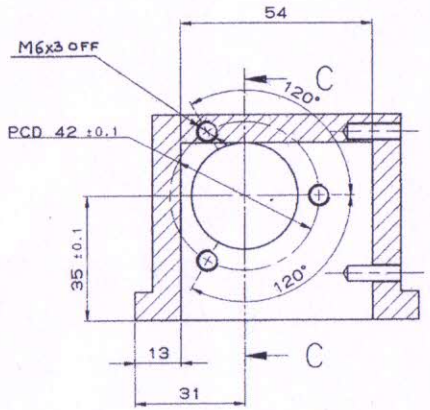

SECTION B-B

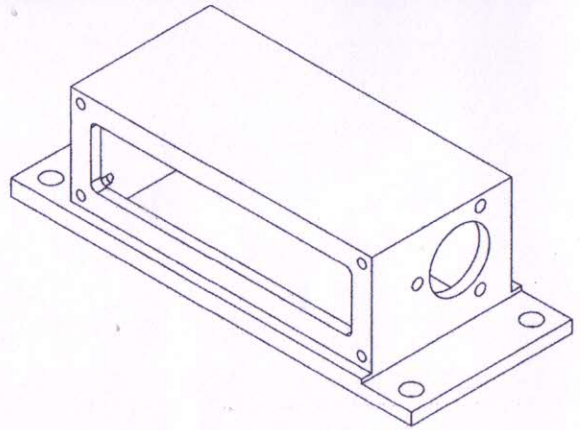

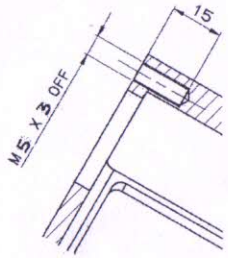

SECTION D-D

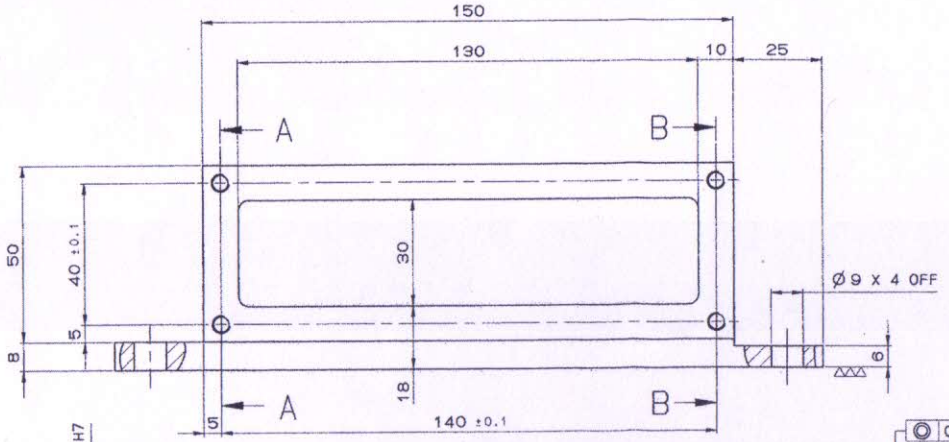

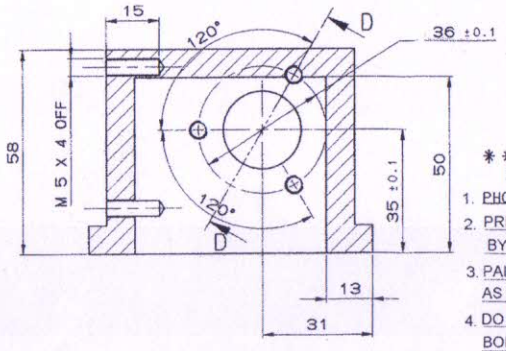

SECTION A-A

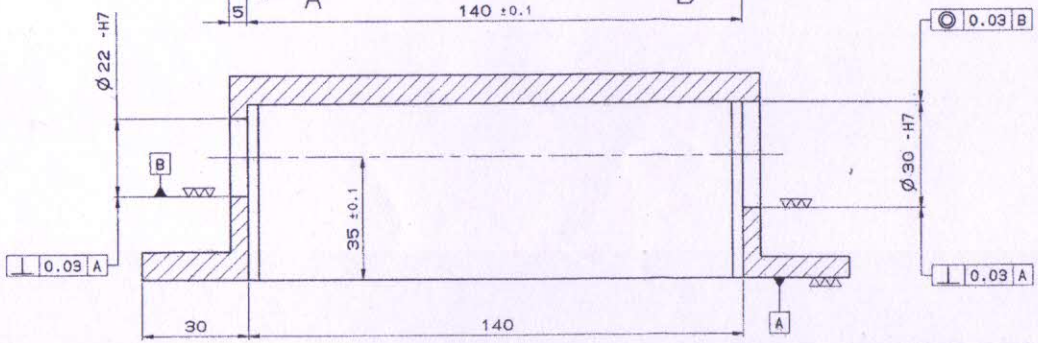

SECTION C-C

** PHOSPHATING AND PAINTING

1. PHOSPHATING TO BE DONE AS PER IS:3618 CLASS-B
2. PRIMER RED OXIDE TO STANDARD IS:12744 TO BE APPLIED BY FIRM WHO IS SUPPLYING STORE TO MPF AS PER DW-1134
3. PAINTING TO BE DONE AT MPF IN OR DURING ASSEMBLY AS PER DW-1134
4. DO NOT APPLY PRIMER AND PAINT ON THREAD AND BORE SURFACE HAVING DIA 22- H7 AND DIA 30 - H7

***

MATERIAL:- GR 280-520W IS:1030-89
TO BE MANUFACTURED FROM CASTING
ALT. MATL:- Gr A2 BS:3100

▽▽ (▽▽▽)

No.OFF	DESCRIPTION	PART No.	MATERIAL	STANDARD DIMENSIONS	REMARKS
1	BLOCK		***		**

GENERAL TOLERANCE	
LINEAR DIMENSIONS	
0-6	±0.1
6-30	±0.2
30-120	±0.3
120-315	±0.5
315-1000	±0.8
1000-2000	±1.2
ANGULAR DIMENSION	
1-10	±1°
10-50	±30'
50-100	±20'
>100	±10'

VALUE IN "um"	
~	>25
▽	6-25
▽▽	1.8-6
▽▽▽	0.025-1.8
▽▽▽▽	<0.025

No.OFF	DRG. No. OF ASSOCIATED PART	INDEX	ALTERATION	DATE	NAME

BLOCK
ELEVATING DRIVE ASSY.
LR-MR LAUNCHER
KAVACH MOD-II

SCALE	DRAWN	02.01.08	VIJAY
1:1	CHECKED		
	APPROVED		

REPLACED BY
REPLACED FOR

NOMINAL SIZE & FIT	DEVIATION
Ø 22-H7	+0.021 / 0
Ø 30-H7	+0.025 / 0

MACHINE TOOL PROTOTYPE FACTORY, AMBERNATH

Design Office

DRAWING No. DW-1108-4022-12

THE COPYRIGHT OF THESE DRAWINGS AND ATTACHMENTS TO THE INDIAN ORDNANCE FACORIES, MINISTRY OF DEFENCE, GOVT. OF INDIA THEY SHOULD NOT BE COPIED,RE-PRODUCED IN ANY WAY OR THE INFORMATION CONTAINED THEREIN MADE AVAILABLE TO UNAUTHORISED PERSONES WITHOUT THE WRITTEN PERMISSION OF THE DIRECTOR OF ORDNANCE FACTORIES.