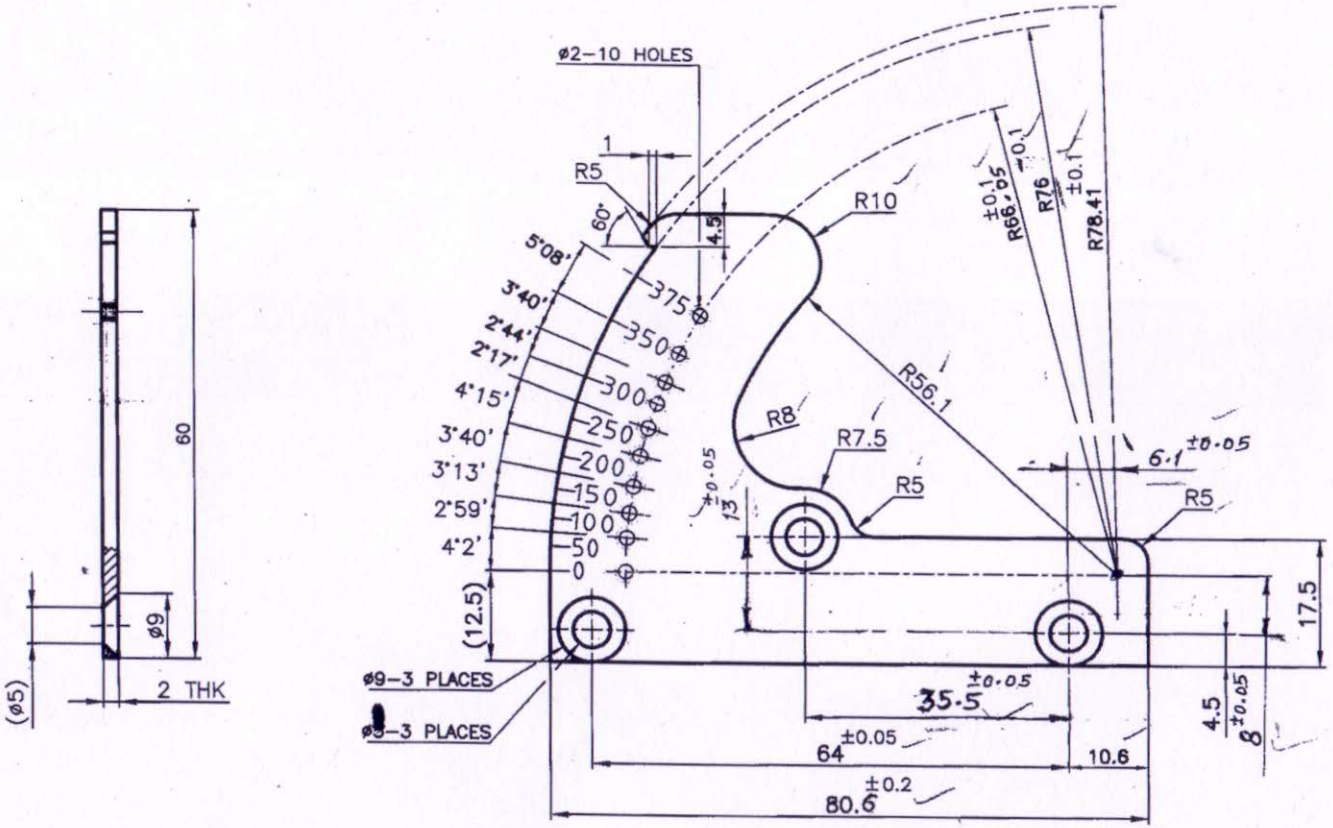

UN CONTROLLED COPY

CERTIFIED CORRECT COPY
OF ...
AT THIS ... 22718

Design & Drawing Office
Ordnance Factory,
Tiruchirappalli-620016

MATERIAL :- IS: 2507- 1975, GRADE -1, DESIGNATION 45 C8.
(OR): BS 1449, PART-1, 1983, GRADE-CS 40 (OR) CS 50.

HARDNESS: 320-360 HV

NOTE:-

NUMBER AND ANGLE INDICATION LINES ARE TO BE ENGRAVED ON THE PLATE AS SHOWN IN THE DRG.
DEGREES MARKING NUMBER SIZE :- HEIGHT 2.5, WIDTH 1 AND DEPTH 0.25
AFTER PROTECTIVE FINISH, ENGRAVED NUMBERS AND ANGLES ARE TO BE FILLED WITH WHITE PAINT.

DIMENSIONS ARE IN mm.
UNTOLERATED DIMNS. AS PER IS : 2102 (MED)
SHARP CORNERS SHOULD BE BLUNT TO R 0.5
PROTECTIVE FINISH : PHOSPATED TO SPECIFICATION:
JSS : 0465-01-1988 CLASS-I (ACCELERATED) OIL FINISH.

PART NO.	DESCRIPTIONS	NO OFF	MATERIAL	TREATMENT	REMARKS

SIGNATURE & DATE.		SUB: RANGE PLATE R/H	SCALE NTS
TRACED		FOR: SIGHT ASSY GROUP	STORE DRG.NO.
DRAWN		OF : 40 mm MGL	
CHECKED		DES.REF.NO.	OPERATION NO.
HOS/D&DO		DRG. No.: 30P 4009*2	
MODEL OFFICER/ FOR MGL.		ORDNANCE FACTORY TIRUCHIRAPPALLI-16.	SHEETS: 1
OFFICER/ D&DO			SHEET No.: 1
APPROVED ON. 07//05/2015			

AMENDMENTS	SIG. & DATE
SL.NO-1 DA NO. 018/17 DE. 17/8/17 DA. NO. 41/17 DE. 20/6/17	