USED ON	ITEM	DRAWING NUMBER	D S CAT NUMBER	DESCRIPTION	No. OFF	REMARKS
UTD-20 ENGINE		CQA(HV) 506 602 E		ASSY. VALVE INTAKE		
		AND ITEM LIST		-WITH DISC LOCK		
	1	CB 20-06-06-1		ASSY. INTAKE VALVE	1	
		AND ITEM LIST				
	2	20-06-48		LOCK VALVE DISC	1	

ISSUE	DATE	NATURE OF AMENDMENTS	ISSUE	DATE	NATURE OF AMENDMENTS

DRN.		CONTROLLERATE OF QUALITY ASSURANCE (HEAVY VEHICLES) AVADI		
CHD.		TITLE : ASSY. VALVE INTAKE WITH DISC LOCK.		
TCD.				
APPD.		SHT. No. 1 OF 1	D S CAT NUMBER	ITEM LIST FOR CQA(HV) 506 602 E
DATE	7th DEC 99			

DRAWING NUMBER
CQA(HV) 506602E

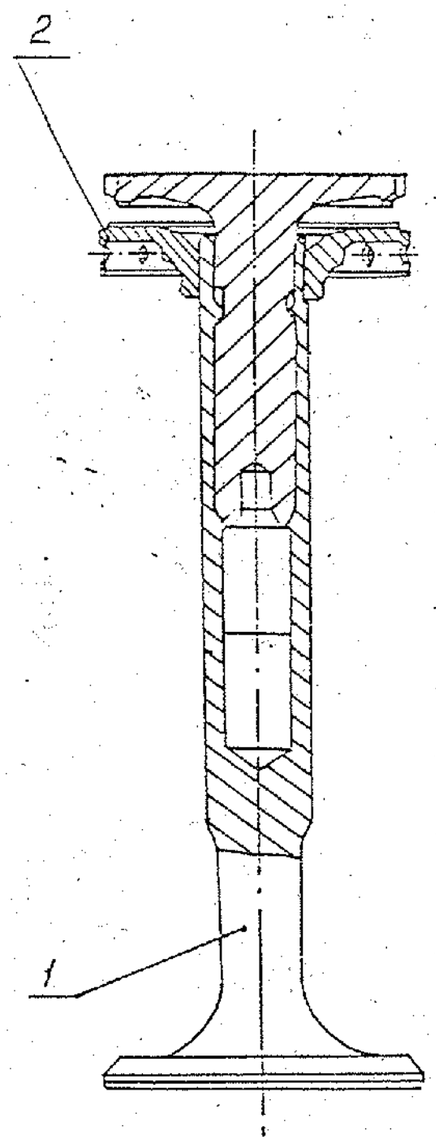

(A) TECHNICAL REQUIREMENTS

1. *Peripheral play of Lock Valve Disc 20-06-48 (Item No. 2) on flats of the Intake Valve rod 20-06-46-2 * is 0.05 to 0.40 on 50 Dia.*

2. *Lock Valve Disc 20-06-48 should match closely with Valve Disc 20-06-47 * by all their splines, 100 % checking is to be ensured.*

3. *Assy Valve Intake with Disc Lock is to be procured / replaced as a set.*

4. *The parts should be clean, free from dust, dirt and oiled to prevent rust.*

* *Part of item No.1*

PILOT SAMPLE SHOULD BE APPROVED BY A H S P BEFORE BULK PRODUCTION

EST. WT. 0.440 kg

TO BE STAMPED OR MARKED WHERE INDICATED THUS # (LETTERS)

ALL SHARP EDGES AND CORNERS TO BE REMOVED UNLESS OTHERWISE STATED MACHINED CORNERS TO HAVE R OUT SIDE R INSIDE EQUIVALENT CHAMFERS ARE PERMISSIBLE.

ISSUE	DATE	NATURE OF AMENDMENTS
A	10.4.02	AUTHY Lt. No. EFA/P/PDO/023 dt 18-3-02

DRN
CHD
TCD
APPD
DATE 7 DEC 99
SCALE:- 1:1
DIMENSIONS IN mm
TOLERANCE ON DIMNS UNLESS OTHERWISE STATED IS : 2102-69.
ALL THREADS TO CONFORM TO

MATERIAL:-

USED ON CQ 20-06-12-6, CQ 20-06-13-6 UTD-20 ENGINE

CONTROLLERATE OF QUALITY ASSURANCE HEAVY VEHICLES AVADI

TITLE ASSY. VALVE INTAKE WITH DISC LOCK

D S CAT NUMBER

DRAWING NUMBER CQA(HV) 506602E

SIZE A3

DRAWING NUMBER
20-06-446-2

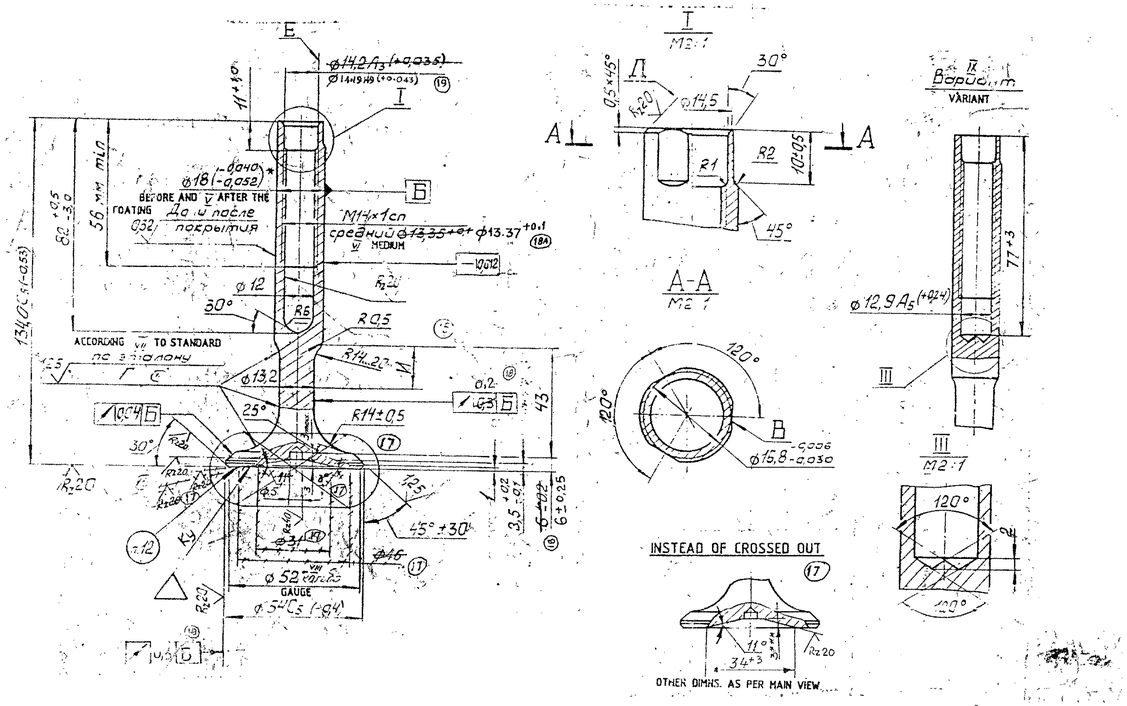

TECHNICAL REQUIREMENTS-IN RUSSIAN

IV

1. Группа контроля II по ТТ-11. НВ 255...302.
2. Неуказанные предельные отклонения размеров: отверстий - по A_1; валов - по B_1; остальных - по CM_1.
3. Резьбы выполнять по нормали 82020-14, выпуск 7.
4. Разношаговость поверхностей Б в пределах допуска.
5. Допуск радиального биения поверхности В на ø16,8 мм относительно оси поверхности Б 0,07 мм.
6. Допускается поверхность Д выполнять радиусом R 0,5.
7. Покрытие поверхности Б Хтв 18...36. Требования к хромированной поверхности по ГОСТ 9.301-78.
Допускается хромирование поверхности Г на длине И=20мм с увеличением диаметра до 13,35 мм.
8. Детали приобретенные, испытывают дефектоскопе по инструкции ИБ 20-17.
9. Приемку детали после термообработки производить согласно ТТ 20-04.
10. *Размеры поверхности после покрытия.
11. ** Размеры обеспечить инструментом.
12. Маркировать товарный знак удобным способом размером 5,5×5,25 мм при отправке в запасные части.
13. Допуск радиального биения поверхности Е относительно поверхности Б 0,02 мм до покрытия, после покрытия 0,04 мм.
14. Овальность и конусообразность поверхности Б не более 0,012 мм по всей длине.
15. Поверхность Г перед хромированием накатать роликом ø30...35 мм; радиус при вершине ролика R=4 +1 мм; нагрузка на ролик 80÷130 кг, подача 100 мм в мин.

EXPLANATORY NOTE :

16. REFERENCE MATERIAL QUOTED :

MATERIAL : 20ХН4ФА ТУ 14-1-381-72.

MATERIAL DETAILS : 20ХН4ФА AVAILABLE IN GOST 4543-71.

CHEMICAL COMPOSITION

CARBON	=	0.17 - 0.24
SILICON	=	0.17 - 0.37
MANGANESE	=	0.25 - 0.55
CHROMIUM	=	0.70 - 1.10
NICKEL	=	3.75 - 4.15
VANADIUM	=	0.10 - 0.18
SULPHUR & PHOSPHORUS	=	0.025 max EACH
COPPER	=	0.30 max

MECHANICAL PROPERTIES :

YIELD POINT	=	70 Kgf/mm² max
ULTIMATE STRENGTH	=	90 Kgf/mm² max
RELATIVE ELONGATION	=	12 % max
RELATIVE REDUCTION ALONG ACCROSS SECTION	=	50 % max
IMPACT STRENGTH	=	10 Kgfm/cm². Max

TECHNICAL REQUIREMENTS- TRANSLATED

IV

1. Control group II to TT-11. HB 255...302.
2. Non-indicated limit deviations of sizes: holes to A_1, shafts to B_1, the test to CM_1.
3. Make thread according to normal 82020-14, issue 7.
4. Pitch difference of B surfaces is within the allowance.
5. Radial runout allowance of B surfaces on ø16.8mm relative to Б surface axis is 0.07mm.
6. It is allowed to make Д surface by radius R 0.5.
7. Coating of Б surface is X_{tv} hardness 18...36.
Requirements to chrome-plating surface are according to GOST 9.301-78.
The chrome-plating of Г surface is allowed on length И =20mm max with diameter increasing up to 13.35mm.
8. Check the part with magnetic flaw detector according to instruction ИБ 20-17.
9. Accept the part after the thermal treatment according to TT 20-04.
10. *Surface sizes after the coating.
11. ** Provide the sizes with tools.
12. Mark the trade mark by beating method of size 5.5x5.25mm when delivering as spare parts.
13. Radial runout allowance of E surface relative to Б surface is 0.02mm before the coating, after the coating - 0.04mm.
14. Ovality and taper of Б surface is no more than 0.012mm on all the length.
15. Roll surface Г before the chrome-plating by roller of ø30...35mm; radius of the roller top is R =4 +1 mm; the load on the roller is 80÷130kg, feed speed is 100mm per min.

(17) *** DIMENSIONS FOR REFERENCE

16	2	268-85	[illegible]	[illegible]
15	2	638-85	[illegible]	[illegible]
14	2	1201	[illegible]	[illegible]
13	3	283-85	[illegible]	[illegible]
[illegible]	[illegible]	[illegible]	[illegible]	[illegible]

PILOT SAMPLE SHOULD BE APPROVED BY A H S P BEFORE BULK PRODUCTION.

EST. MASS	TO BE STAMPED OR MARKED WHERE INDICATED THUS #
3.260 Kg	LETTERS)

ALL SHARP EDGES AND CORNERS TO BE REMOVED UNLESS OTHERWISE STATED MACHINED CORNERS TO HAVE R OUT-

19	5-4-94	AUTHY NOTN-NO. 1413-88	
18A	28.8.91	Authy. Notn. No. 3-87	
18	19.1.89	Notn. No. 28-87	
17	19.7.89	Notn. No. 383-86	
ISSUE	DATE	NATURE OF AMENDMENTS	

DRN		MATERIAL: 20ХН4ФА TY14-1-381-72
CHD		
TCD		
APPD		CONTROLLERATE OF QUALITY ASSURANCE (HEAVY)
DATE	1.9.7.89	
SCALE 1:1		
DIMENSIONS IN mm		
TOLERANCE ON DIMNS UNLESS OTHERWISE STATED IS 2102-69		TITLE: INTAKE VALVE
ALL THREADS TO CONFORM TO		
D.S. CALCULATOR		DRAWING NUMBER 20-06-446

USED ON: Ld 20-06-06-1

20-06-47

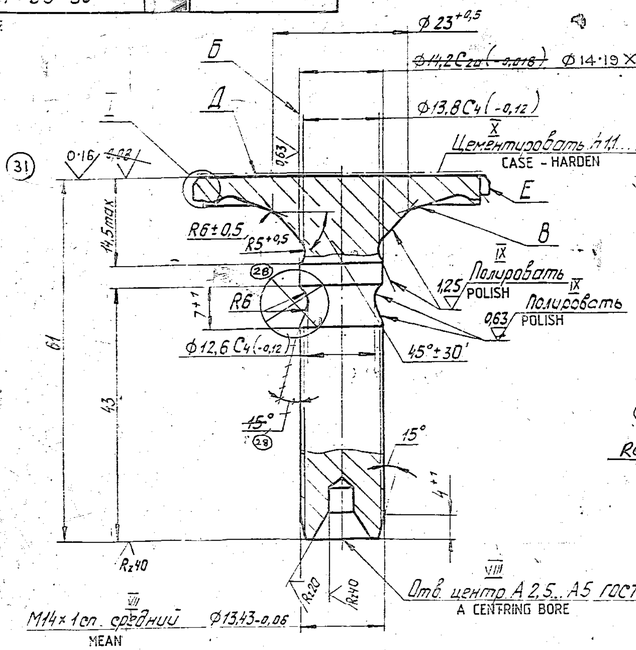

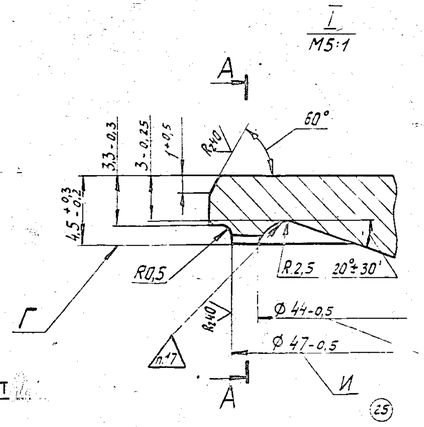

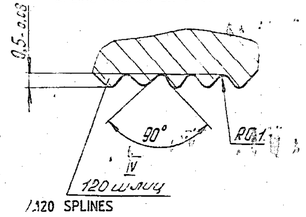

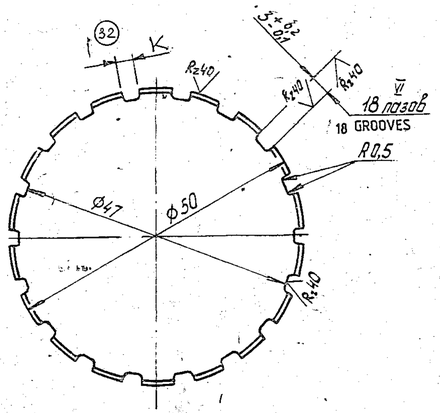

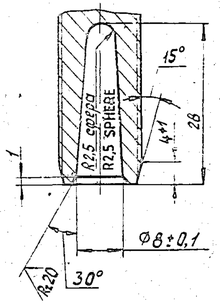

(33) ALT. MATERIAL : BS: 970 STEEL GRADE En 36B.

CHEMICAL COMPOSITION	MECHANICAL PROPERTIES
C = 0·12 TO 0·18	ULTIMATE TENSILE STRENGTH — 102 kg/mm²
Si = 1·10 TO 0·35	ELONGATION % — 16
Mn = 0·30 TO 0·60	IZOD IMPACT — 4·8 Kgm/cm²
Cr = 0·60 TO 1·10	
Ni = 3·0 TO 3·75	
P = 0·05 (Max)	
S = 0·05 (Max)	

1. CONTROL GROUP III IS ACC. TO TT-11. HRC: 28 - - - 42, EXCEPT 'Д' SURFACE. CASE-HARDENING OF 'E' SURFACE IS ALLOWED.
2. NON-INDICATED LIMIT DEVIATIONS OF DIMENSIONS ARE OF: HOLES BY A7, SHAFTS BY B7, THE REST BY CM7.
3. RUN-OUT ALLOWANCE RELATIVE TO MEAN DIAMETER AXIS OF THREAD OF SURFACE IS:
   'Б' - 0,02mm;
   'Г' - (FOR SPLINES) 0.05mm ON 47mm DIA.;
   'Д' - 0.03mm ON 45mm DIA.
4. ACCEPT 'В' SURFACE BY TEMPLET RELATIVE TO 'Г' SURFACE. CLEARANCE OF 0.2mm MAX. IS ALLOWED IN PLACES OF R 5 AND R 2,5.
5. CONTROL 'Ж' AND 'И' DIMENSIONS BEFORE SPLINE ROLLING.
6. PROVIDE SPHERICITY OF 0.00 - - - 0.07mm ON 'Д' SURFACE.
7. MAKE THREAD ACC. TO NORMAL 82020-14, ISSUE 7.
8. NOTCHES ON GROOVE OF THREAD OUTLET ARE NOT ALLOWED. CHECK THREAD ASPERITY WITH MICROSCOPE.
9. THREAD PROFILE DEVIATION ON 1/2 OF ANGLE IS ± 35' MAX.
10. TAPER (DIRECT) BY MEAN DIAMETER OF THREAD IS 0.02mm MAX. TAPER IN OPPOSITE DIRECTION IS NOT ALLOWED.
11. ROLL THREAD BY ROLLER. ROUNDING OF COMB PEAKS IS ALLOWED OF NO MORE THAN R 0.17mm WHEN ROLLING THREAD.
12. MAKE SPLINE ROLLING ACC. TO ETALON. CHECK RUN-OUT AND MISALIGNMENT OF SPLINES RELATIVE TO 'Б' SURFACE AXIS WITH SPECIAL CALIBRE ON ADJOINING IN FOUR POSITIONS EVERY 90°. ADJOINING OF SPLINES SHOULD BE CLOSE.
13. ~~POLISH OR SUPERFINISH~~ 'Д' SURFACE. ACCEPT BY ETALON.
14. CENTRING HOLE ON 'Д' SURFACE IS NOT ALLOWED.
15. ~~COATING (Хим. Окс. Прм.~~ ~~ABSENCE OF COATING IS ALLOWED ON INNER SURFACE.~~
16. CHECK PART WITH MAGNETIC FLAW DETECTOR ACC. TO ИВ 20-17 INSTRUCTION.
17. BRAND BY ACIDLESS METHOD OR WITH PANTOGRAPH.

(29) 15. COATING: CHEMICAL RHOSPHATING, OIL FINISHING. SURFACE B NEED NOT BE COATED. COATING IS ALLOWED AROUND WITH SUBSEQUENT DRESSING OF SURFACE B AND ABSENCE OF COATING ON THE INTERNAL SURFACES IS PERMITTED.

EXPLANATORY NOTE:

18. VALVE DISC SHALL BE MANUFACTURED FROM CHROME NICKEL CASE HARDENING STEEL TO EN-36B OF BS: 970 OR 13Ni 3Cr 80 TO IS: 4432-67.
19. THE HEAD OF THE VALVE DISC SHALL BE FORMED BY HOT UPSETTING GRAIN FLOW AT THE CONTOUR OF THE NECK SHALL BE UNIFORM AND CONTINUOUS.
20. SURFACE 'Д' SHALL BE CASE CARBURIZED TO A CASE DEPTH OF 1.1 TO 1.6 mm AND CASE HARDNESS 60 ±2 HRC. THE VALVE DISK SHALL BE REFINED AND QUENCHED TO A CORE HARDNESS OF 26-34 HRC. CASE CARBURISATION OF SURFACE 'E' IN THE PROCESS IS PERMITTED.
21. THREAD 14 X 1 SHALL BE ROLLED TO THE FOLLOWING DIMENSIONS:
    MAJOR DIA - - - - - - - - - 14.00 MAx AND 13.80 Min.
    PITCH DIA - - - - - - - - - 13.43 - 0.06mm.
    MINOR DIA - - - - - - - - - 12.14 MAx. AND 12.90 Min.
    TOLERANCE ON PITCH - - - - ±0.02mm.
    TOLERANCE ON HALF THREAD ANGLE (30°) = ±35'
    RIDGE RADII - - - - - - - - → 0.17mm
22. SELECTIVE ASSY. WITH MATCHING VALVE, MATCH NO. AS GIVEN IN ASSY DRG. No. СБ. 20-06-06-1 AND СБ 20-06-07-1 SHALL BE MARKED BY ELECTROGRAPH OR ACID FREE METHOD AT LOCATION 17.
23. IT IS ALLOWED TO MAKE 2-3 'K' GROOVES BY DIMENSION OF $3^{+0.3}_{-0.1}$ mm.

ISSUE	DATE	NATURE OF AMENDMENTS
33	18-10-93	AUTHY LTR No: 90241/ AHOP/ENG. DT 7-5-94
32	5-4-93	Notn no. 10:5-91
31	5-4-93	Notn no. 653-91
30	5-4-93	Notn no. 1413-88
29	16-3-93	Notn No. 2099-88
28	14-7-87	Notn. No 916-85

DRN — SCALE 2 : 1 — DIMENSIONS IN mm
CHD — TOLERANCE ON DIMENSIONS UNLESS OTHERWISE STATED
TCD — AL THREADS CONFORM TO
APPD
DATE 15-7-86

EST MASS 0. 125 Kg

TO BE STAMPED OR MARKED WHERE INDICATED THUS ⊂⊃ LETTERS 1

ALL SHARP EDGES AND CORNERS TO BE REMOVED UNLESS OTHERWISE STATED MACHINED CORNERS TO HAVE R OUTSIDE R INSIDE EQUIVALENT CHAMFERS ARE PERMISSIBLE

MATERIAL : 12 X H 3A TY-14-1-381-72

USED ON : Сб. 20-06-07-1

CONTROLLERATE OF INSPECTION (HEAVY VEHICLES) AVADI

TITLE VALVE DISC

D S CAT NUMBER

DRAWING NUMBER 20-06-47

20-06-48

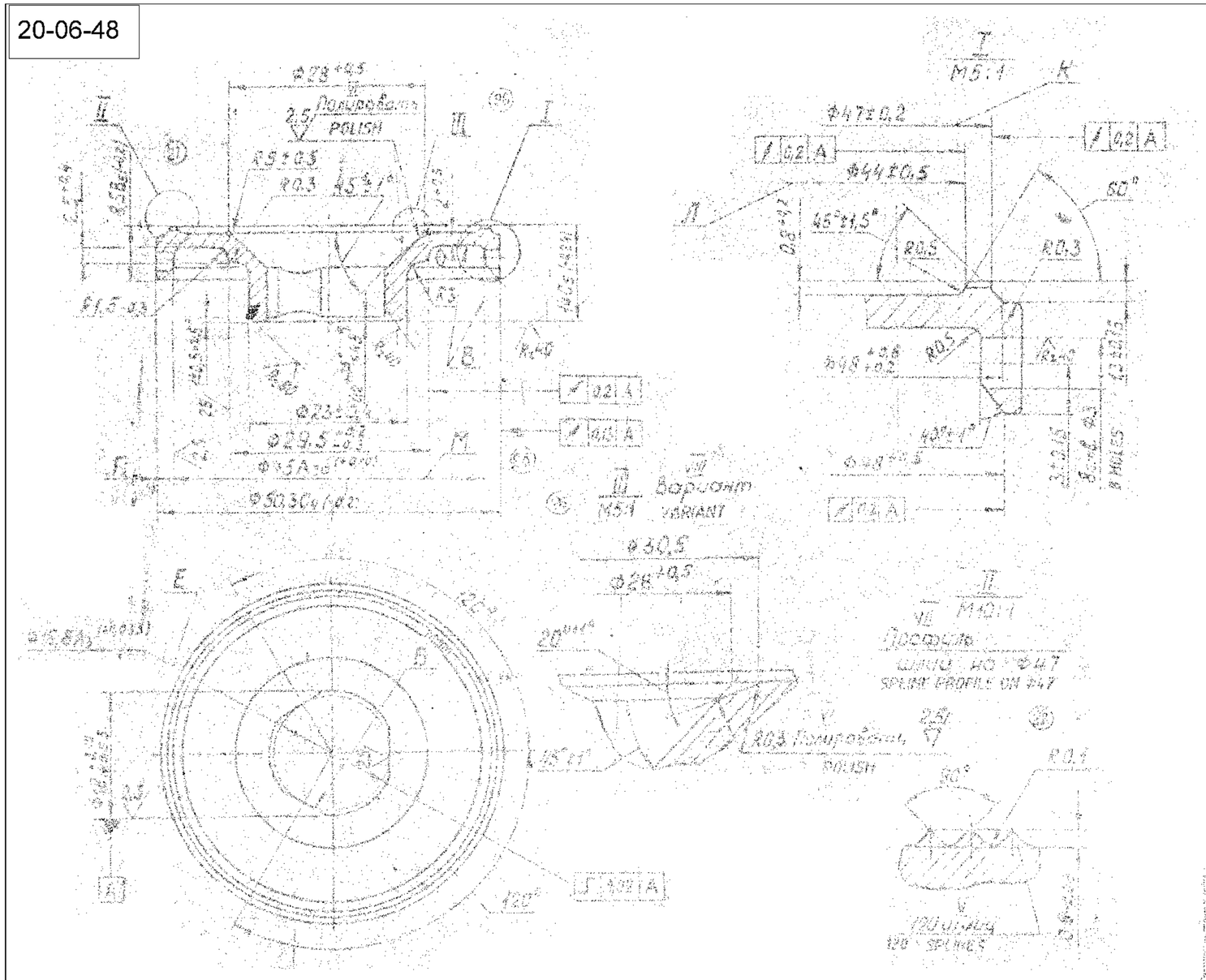

1. Control group III use to GOST Nos 52...57.
2. Non-indicated limit deviations of dimensions are: holes by H7, shafts by h7, the rest by ±IT/2.
3. Non-uniform thickness of walls no more than 0.15 mm.
4. Control K and/dimensions before rolling.
5. Outer knockings allowed by depth of no more than 0.2 mm, through testing N diameter on 3 end face.
6. Make spline rolling by stalon. Check splines with special calibre in three positions every 120° on mandrel, made by maximum dimensions of mated parts. Adjusting of splines should be close.
7. Accept capacity of B surfaces by stalon.
8. Coating: Xim. Oxid.op4.
9. Grind on tap (Gost 940-55) for set of parts with sealing.
10. * Provide dimensions with tools.
11. It is allowed to make up variants.
12. ** ALTERNATE MATERIAL: LOCK SHALL BE MANUFACTURED FROM CHROME MOLYBDENUM STEEL 40-HA TO A 5 FOR OR 40 G 1 ... No 28 10 15 - 57 - N69.

* PILOT SAMPLE SHOULD BE APPROVED BY A U S P BEFORE BEGIN PRODUCTION

*** CGA(HV)506602E
CGA(HV) 506603E

SHALL - 7			

USED ON

~~C6 20-06-12-6~~
~~C6 20-06-13-6~~
CQA(HV) 506602E

NO.	DRAWING NUMBER	D S CAT NUMBER	DESCRIPTION	OFF	REMARKS
	C6 20-06-06-1		ASSEMBLY INTAKE VALVE		
	& ITEM LIST				
1	20-06-46-2		INTAKE VALVE	1	
2	20-06-47		VALVE DISC	1	

ISSUE	DATE	NATURE OF AMENDMENTS	ISSUE	DATE	NATURE OF AMENDMENTS

DRN	Bhiraja	CONTROLLERATE OF INSPECTION (HEAVY VEHICLES) AVADI		
CHD	[illegible]	TITLE:- ASSEMBLY INTAKE VALVE		
TCD	B. Thiyagarajan			
APPD	[illegible]		D S CAT NUMBER	ITEM LIST FOR
DATE	23. 7. 87	SHEET 1 OF 1		C6.20-06-06-1

KVD No. 63117

Сб 20-06-06-1

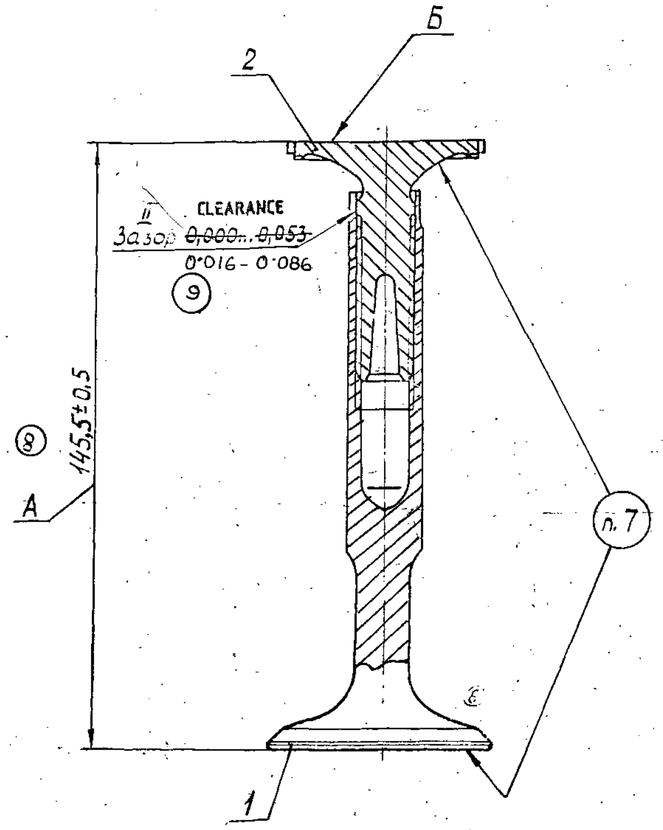

7. Маркировать электрографом шрифтом ПО-3 ГОСТ 2930-62 номер спаренности по ~~эталону~~ (8) Номера наносить от 1 до 99. Каждая сотня имеет алфавитную букву.

8	3	282-85		
7	1	1360-85		
6				

TECHNICAL REQUIREMENTS - IN RUSSIAN

I

1. При ввертывании тарелки клапана в клапан резьбу смазывать смесью касторового масла ГОСТ6757-73 (5 весовых частей) и графита ГОСТ 5279-74 (1 весовая часть).

2. Момент заворачивания тарелки клапана, ввернутой в клапан до размера А ~~250...450~~ 300 Нм (25...~~45~~ 80 кгсм).

3. Радиальный люфт тарелки клапана при выходе ее направляющей части из клапана не более 0,04 мм.

При размере А радиальный люфт тарелки клапана не допускается.

(5) 4. Допуск торцового биения поверхности Б относительно оси штока клапана на ф46 мм 0,07мм, проверять при размере А и при вывернутой тарелке клапана относительно клапана на 120° и 240°.

5. Касание торца штока клапана в галтель тарелки клапана при размере А не допускается.

6. Допускается в сопрягаемых местах засветление оксидированных поверхностей и легкие следы натиров.

5	1	283-85		57.85
4	1	729-83		
3		1386-81		
2		915-81		
1		198-79		
Изм	Лист	N докум	Подп.	Дата

TECHNICAL REQUIREMENTS - TRANSLATED

Сб.20-06-06-1
Intake Valve

I.

1. When screwing the valve head into the valve lubricate the with mixture of castor oil GOST 6757-73(5 parts by weight) and GOST 5279-74(1 part by weight).

(8A) 2. Tightening torque of the valve head screwed into the valve size A ~~250...450~~ 300 Nm (25...~~45~~ 80 kgfcm).
(B) 2.5...8 Nm

3. The radial play of the valve head is 0.04mm max when cool of its guiding part out of the valve.

The radial play of the valve head is not allowed at size A.

4. The allowance of camming action of surface Б relative to the axis of the valve rod on Ø46mm is 0.07mm, check at size A and when the screw out valve head relative to the valve for 120° and 240°.

5. Touching of the valve rod end face into the valve head fillet is not allowed at size A.

6. Lightening of oxidized surfaces and slight traces of rubbing are allowed in the mated places.

7. Mark with electrograph by type ПО-3 GOST 2930-62 the pair number. Put the numbers from 1 up to 99. Every hundred has an alphabetical letter.

~~II - Clearance~~

PILOT SAMPLE SHOULD BE APPROVED BY A H S P BEFORE BULK PRODUCTION

B	23.8.97	LT. No. 93740/IND III / 338 dt 21.8.97	EST MASS 0·385 kg	TO BE STAMPED OR MARKED WHERE INDICATED THUS # (LETTERS)
9	4-4-94	Authy No 1413-88	ALL SHARP EDGES AND CORNERS TO BE REMOVED OTHERWISE STATED MACHINED CORNERS TO HAVE R INSIDE EQUIVALENT CHAMFERS ARE PERMISSIBLE	
8A	28.8.91	Authy Notn. No. 3-87ПЦ		
ISSUE	DATE	NATURE OF AMENDMENTS		
DRN		SCALE:- 1 : 1	MATERIAL:- —	USED ON:- ~~Сб 20-06-12-6~~ ~~Сб 20-06-13-6~~ CQA(HV) 506602 E
CHD		DIMENSIONS IN mm		
TCD		TOLERANCE ON DIMNS UNLESS OTHERWISE STATED	CONTROLLERATE OF INSPECTION (HEAVY VEHICLES) AVADI.	
APPD			TITLE:- ASSY INTAKE VALVE	
DATE 23-7-87		ALL THREADS CONFORM TO	D S CAT NUMBER	DRAWING NUMBER Сб 20-06-06-1