				QTY	REMARKS
		CB 327-07-1	PUMP ELEMENT ASSY		
			PARTS		
	1	327 - 57 - 1	PLUNGER	1	
	2	327 - 58 - 1	PLUNGER BARREL	1	
	3	340 - 183 OR 329 - 31A	GASKET	1	

ISSUE	DATE	NATURE OF AMENDMENTS	ISSUE	DATE	NATURE OF AMENDMENT
DRN		USED ON	CB 20-27-00-4		
CHD		CONTROLLER RATE OF INSPECTION HEAVY			CS AVADI
TCD		TITLE	PUMP ELEMENT ASSY		
APPD		DRAWING NUMBER		ITEM LIST NO	
DATE 7-05-87	SHT No 2 OF 2			CB 327-07-1	

CB327-07-1

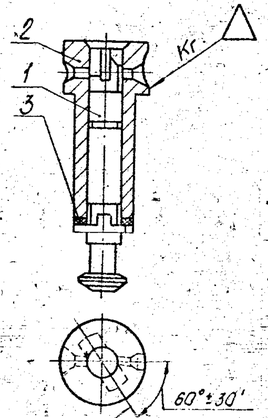

PLUNGER DOG AXIS WHEN PERFORMING CHECK AS PER ITEM 5

1. COMPOUND-LAPPED PARTS, i.e., PLUNGER AND PLUNGER BARREL COMPRISE A PRECISION PAIR, IN WHICH REPLACEMENT OF ONE PART WITH A SIMILAR PART FROM SOME OTHER PRECISION PAIR IS NOT PERMITTED.

2. DIAMETER OF THE HOLE OF THE COMPOUND-LAPPED PLUNGER BARREL SHOULD BE $10^{+0.1}$ mm.

3. THERE SHOULD NOT BE NICKS AND CRACKS ON THE EDGES AND CHIPPED EDGES ON THE COMPOUND-LAPPED SURFACES, OF THE PARTS OF THE PRECISION PAIR ARE NOT ALLOWED. COMPOUND-LAPPED SURFACES SHOULD HAVE UNIFORM LUSTER. OVER THE ENTIRE SURFACE TRACES OF GRINDING ARE NOT ALLOWED. MINUTE SCRATCHES, HARDLY, VISIBLE TO THE NACKED EYE ARE PERMITTED. FINISH OF THE COMPOUND-LAPPED SURFACES SHOULD NOT BE WORSE THAN STANDARD. THE SURFACE MAY HAVE NON-UNIFORM LUSTER. IN THE LOWER PART OF THE PLUNGER (NOT ABOVE OIL GROOVE).

4. THE PLUNGER PRELIMINARILY WASHED TOGETHER WITH THE PLUNGER BARREL IN DIESEL FUEL, SHOULD SMOOTHLY DESCEND DOWN TO THE STOP BY GRAVITY WHEN IT MOVES OUT OF THE BARREL IN THE VERTICAL POSITION BY 40 TO 50 mm. CHECK IN DIFFERENT POSITIONS AGAINST THE ANGLE OF TURN OF THE PLUNGER IN THE BARREL

WHEN THE PLUNGER MOVES IN THE BARREL, NO LOCAL RESISTANCES STOPAGES AND BUILDING IN ANY POSITION OVER THE ENTIRE LENGTH AND ANGLE OF TURN ARE NOT PEMITTED.

5. USE THE TEST SET MADE IN COMPLIANCE WITH DRAWING БС 507И TO PEFORM CLOSE FIT CHECK AGAINST STANDARD PRECISION PAIRS AS SPECIFIED IN INSTRUCTIONS UB 46-1 BY USING MIXTURE OF OIL AND DIESEL FUEL, HAVING ENGLER VISCOSITY OF $1.9^{\pm 0.1}$ AT TEMPERATURE OF 50° C, MIX THE MIXTURE PROPERLY BEFORE FILLING THE TANK. SURFACES OF PLUNGER AND BARREL SHOULD BE KEPT FREE FROM PETROLEUM AND GREASE OF OTHER GRADES.

THE WEIGHT OF THE TEST SETSHOULD CREATEA PRESSURE OF 29.5^{+5} MPA (300^{+5} Kg/cm^2) IN THE PLUNGER BARREL, WASH THE PRECISION PAIR THROUGHLY IN FILTERED DIESEL FUEL BEFORE THE TEST.

THE PRECISION PAIR IS CONSIDERED TO BE FIT FOR SERVICE AS PER CLOSE FIT IN THAT CASE WHEN THE WEIGHT DROPS FOR THE TIME BEING WITH THE STANDARD READING LIMITS.

NOTE: BEFORE TAKING THE FIRST MEASUREMENTS, IT IS NECESSARY TO SLIGHTLY PRESS THE END CAP OF THE PLUNGER BARREL AND FORCE FUEL OUT OF THE BARREL BY LOWERING THE WEIGHT BY HAND, THIS DONE, RELEASE THE PLUNGER BARREL, BRING UP THE WEIGHT, SINK THE PLUNGEAND TAKE THE FIRST MEASUREMENT.

6. INSTALL PART 340-183 OR 329-31A (REF. NO. 3) TO PREVENT THE UPPER EDGE OF THE PLUNGER FROM CRUSHING IN STORAGE, TRANSPORTATION AND WHEN DELIVERED AS SPARE-PARTS.

REMOVE GASKETS BEFORE INSTALLING THE PRECISION PAIR ON TO THE PUMP.

7. PRESERVATION AND STORAGE OF PRECISION PAIR SHOULD BE AS PER MANUFACTURER'S INSTRUCTIONS DEPENDING UPON THE STORAGE LIFE.

PILOT SAMPLE SHOULD BE APPROVED BY A H S P BEFORE BULK PRODUCTION

ISSUE	DATE	NATURE OF AMENDMENTS

EST. MASS 0,140 Kg

TO BE STAMPED OR MARKED WHERE INDICATED THUS # (LETTERS)

ALL SHARP EDGES AND CORNERS TO BE REMOVED UNLESS OTHERWISE STATED MACHINED CORNERS TO HAVE R OUTSIDE & INSIDE EQUIVALENT CHAMFERS ARE PERMISSIBLE

DRN — SCALE :- 1 : 1 — MATERIAL :- — USED ON :- CБ 20-27-00-4

CHD — DIMENSIONS IN mm

TCD — TOLERANCE ON DIMNS UNLESS OTHERWISE STATED

APPD

DATE 6/3/67 — ALL THREADS CONFORM TO

CONTROLLERATE OF INSPECTION (HEAVY VEHICLES) AVADI

TITLE :- PUMP ELEMENT

D S CAT NUMBER

DRAWING NUMBER CБ 327-07-1

327-57-1

Rz 20/ (√)

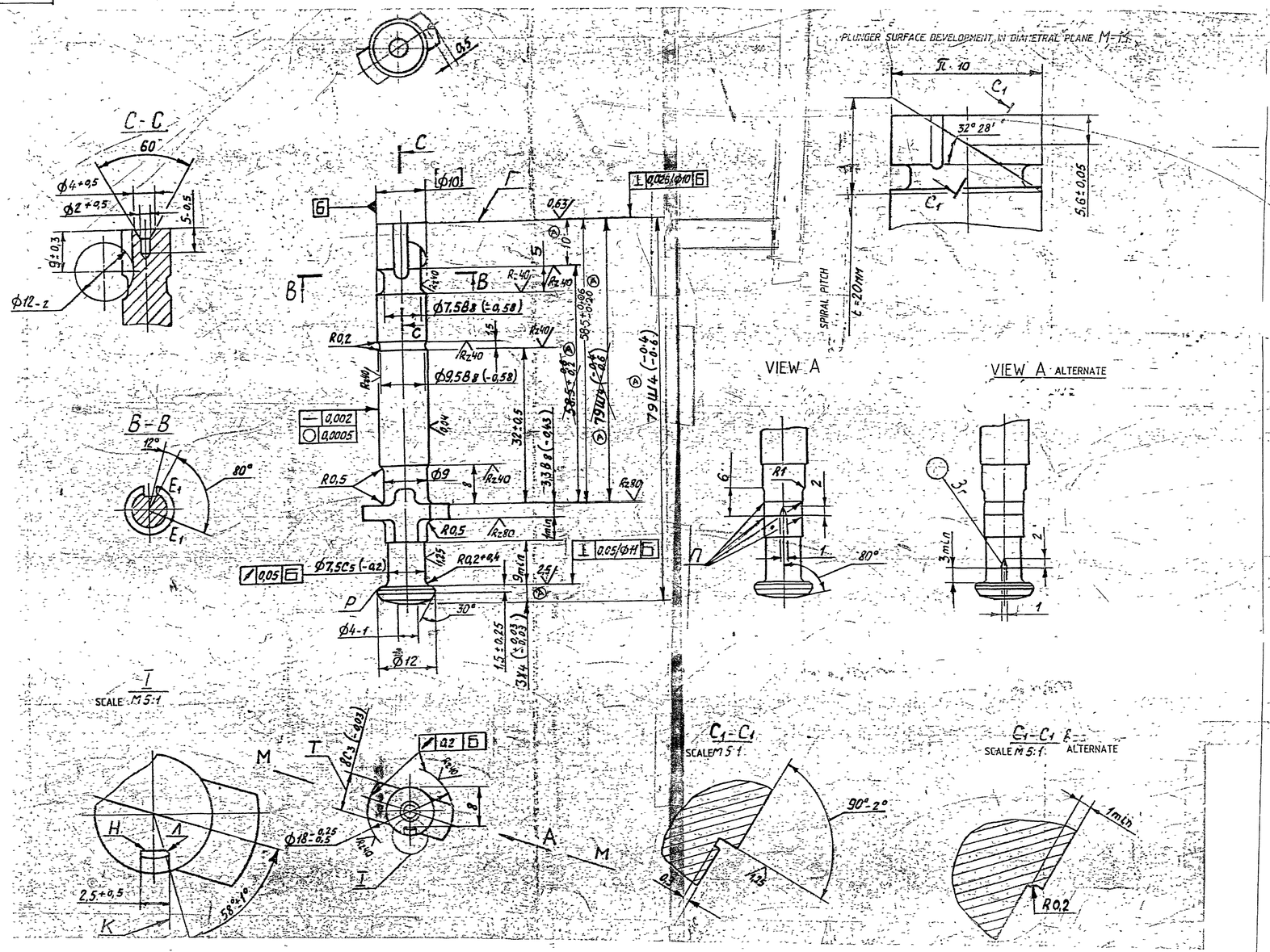

1 INSPECTION GROUP III AS PER TECHNICAL REQUIREMENTS TT-11

2. HRC 61 TO 63 REMOVE SCALE FROM UNMACHINED SURFACES AFTER HEAT TREATMENT.

SUBJECT THE PART TO HEAT TREATMENT STABILIZING DIMENSIONS.

3. UNSPECIFIED LIMIT DEVIATIONS OF DIMENSIONS ARE AS FOLLOWS:- FOR HOLES - AS PER A7
SHAFTS - AS PER B7
OTHERS - AS PER CM7

4. SURFACE Б SHOULD HAVE UNIFORM LUSTRE OVER THE ENTIRE SURFACE, TRACES OF GRINDING ARE NOT PERMITTED. SURFACE Б MAY HAVE NON UNIFORM LUSTRE IN LOWER PART OF THE PLUNGER (NOT ABOVE OIL GROOVE) ONLY SMALLEST TRACES HARDLY VISIBLE TO THE NACKED EYE ARE PERMITTED.

5 CHECK THE PART BY USING MAGNETIC FLAW DETECTOR. CARRY OUT ACCEPTANCE IN COMPLIANCE WITH INSTRUCTIONS ИБ-17.

6. BLUNT SHARP EDGES, EXCEPT FOR THOSE INDICATED IN THE DRAWING. BLUNT EDGES П WITH A RADIUS OR CHAMEFR OF 0,4 MM. MAX BLUNT EDGE Р WITH RADIUS OR CHAMFER OF 0.1 TO 0.3 MM.

7 STRAIGHTENING IS NOT PERMITTED i.e. WHEN PERFORMING ANY OPERATION

8 SURFACE Г MAY BE STEPPED UP TO 0.3 MM IN ANY DIRECTION WITH RESPEC TO SURFACE Н WHEN GRINDING SURFACE К.

9 DEVIATION OF CUT-OFF EDGE(SECTION(E_1 — E1) FROM A GIVEN GEOMETRICAL FORM AND ITS ANGLE MEASURED WITH DIRECTION OF GENERATRIX, SHOULD NOT EXCEED 0.02 MM OVER THE WORKING LENGTH OF THE EDGE.

PERFORM CHECK AT A DISTANCE OF NOT MORE THAN 0.5 MM FROM SURFACE Б.

10. DISPLACEMENT OF DOG Т FROM DIAMETRAL PLANE OF SURFACE Б SHOULD NOT EXCEED 0.02 MM.

11 TAPER OF SURFACE Б SHOULD NOT EXCEED 0.0018 MM WITH GREATER DIAMETER BEING ON THE SIDE OF BUTT END Г.

12. COATING - CHEMICALLY OXIDISED, OILED, EXCEPT FOR SURFACE Б. ABSENCE OF OXIDATION ON THE SPIRAL EDGE IS PERMITTED. IT IS NOT NECESSARY TO OXIDIZE THE PART, AFTER OXIDATION SURFACES WHICH ARE DATUM OF SURFACES FOR MACHINING - THE PART MAY HAVE PARTIALLY DAMAGED OXIDATION

13 MAINTAIN DIMENSION Т OVER THE LENGTH OF AT LEAST 4 MM FROM EACH SIDE

14. CARRY OUT FINAL MACHINING AS PER DIMENSION GIVEN IN SQUARE BRACKETS IN ASSEMBLY 327-07-1

15 CUT-OFF EDGE AND EDGES, FORMED BY INTERJECTION OF SURFACE Б WITH OTHER SURFACES, SHOULD BE SHARP AND FREE FROM ROUNDINGS, CHAMFERS, WICKS, CHIPPINGS AND BURRS.

EXPLANATORY NOTE :

MATERIAL QUOTED STEEL ШХ15 GOST 801-78

BALL BEARING STEEL WITH CHROMIUM (X) CONTENT 1.5% BY WEIGHT

CHEMICAL COMPOSITION :

CARBON	=	0.95 - 1.05
SILICON	=	0.17 - 0.37
MANGANESE	=	0.20 - 0.40
CHROMIUM	=	1.30 - 1.65
SULPHUR	=	0.02 (max)
PHOSPHORUS	=	0.027 (max)
NICKEL	=	0.30 (max)
COPPER	=	0.25 (max)
NICKEL & COPPER	=	0.50 (max)

NOTE

THE STEEL SHALL BE FREE FROM NON-METALLIC INCLUSIONS (CLEANLINESS OF BALL BEARING STEEL QUALITY) POROSITY, GASHOLES, DECARBURISATION AND OTHER METALLURGICAL DEFECTS LIKE CARBIDE NET-WORK & SEGREGATION

PILOT SAMPLE SHOULD BE APPROVED BY A H S P BEFORE BULK PRODUCTION

EST MASS 0.04 kg	TO BE STAMPED OR MARKED WHERE INDICATED THUS ⊕ LETTERS
ALL SHARP EDGES AND CORNERS TO BE REMOVED UNLESS OTHERWISE STATED MACHINED CORNERS TO HAVE R OUTSIDE R INSIDE EQUIVALENT CHAMFERS ARE PERMISSIBLE	

ISSUE	DATE	NATURE OF AMENDMENTS
A	17-8-87	Authy Let-No 93872/IND-III/454 dt 22-5-87

DRN		MATERIAL - STEEL	USED ON - UTD-20
CHD		ШХ15 GOST 801-78	СБ 327-07-1
TCD		CONTROLLERATE OF QUALITY ASSURANCE (HEAVY VEHICLES)	
APPD		A V A D I	
DATE	6-3-87		
SCALE - 2:1			
DIMENSIONS IN mm		TITLE	
TOLERANCE ON DIMNS UNLESS OTHERWISE STATED IS 2102-69		PLUNGER	
ALL THREADS TO CONFORM TO		DESCRIPTIVE NUMBER	DRAWING NUMBER 327-57-1

327-58-1

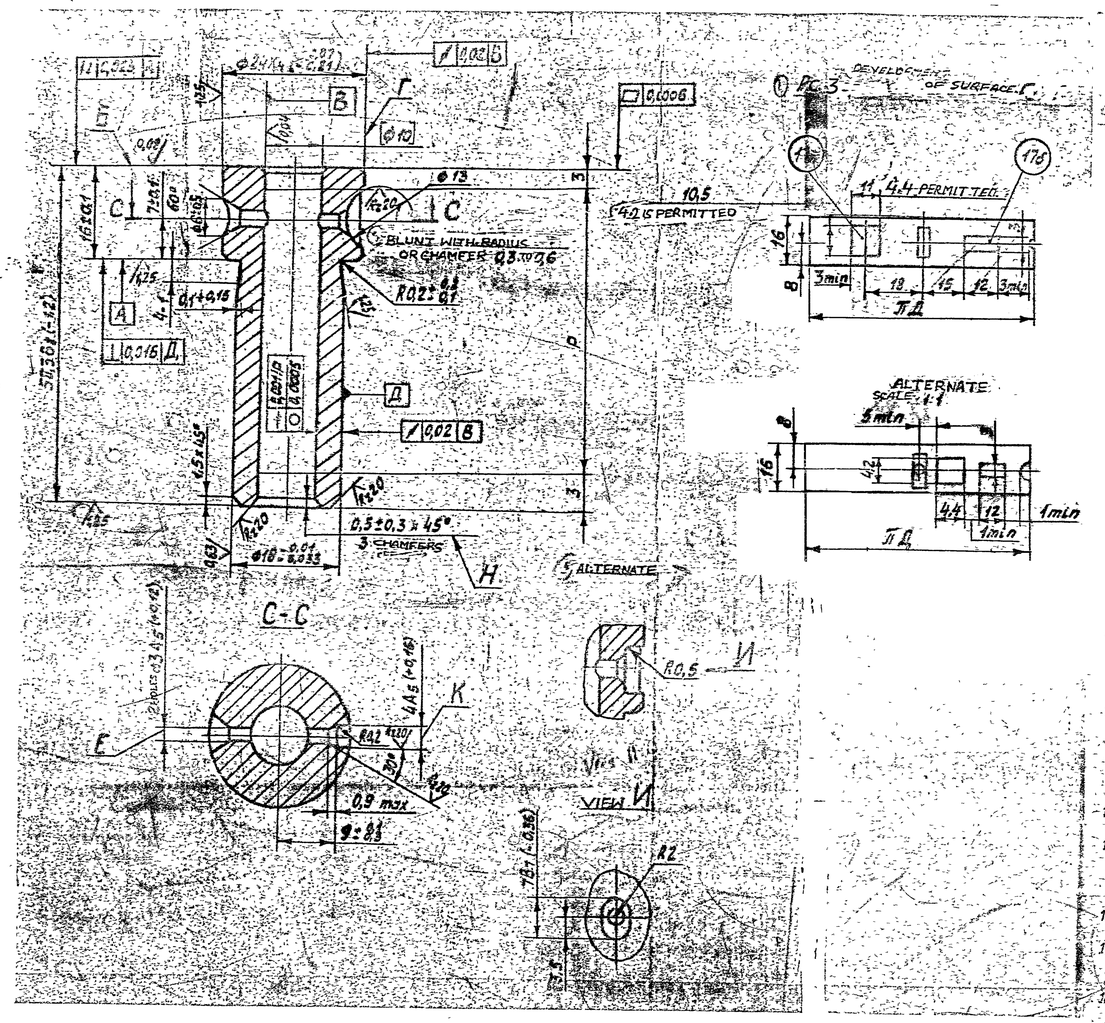

1. INSPECTION GROUP I AS PER TECHNICAL REQUIREMENTS TT-11
2. HRC 61 TO 63.
3. UNSPECIFIED LIMIT DEVIATIONS OF DIMENSIONS ARE AS FOLLOWS:-
   FOR HOLES - AS PER A7.
   OTHERS - AS PER CM7.
4. NON-SQUARENESS OF COMMON AXIS OF HOLES E WITH RESPECT TO AXIS OF SURFACE B SHOULD NOT EXCEED 0.15 MM AS PER DIAMETER OF 23 MM
5. MISALIGNMENT OF AXIS OF HOLES E AND GROOVE K WITH RESPECT TO CENTRE PLANE OF SURFACE B SHOULD NOT EXCEED 0.2 MM.
6. TAPER OF SURFACE B SHOULD NOT EXCEED 0.0018 MM, WITH THE DIAMETER BEING LESS FROM THE SIDE OF BUTT-END B OVER LENGTH P.
7. LAPPED SURFACE B SHOULD HAVE UNIFORM LUSTRE OVER THE ENTIRE SURFACE.
8. SURFACE Б AND B SHOULD BE FREE FROM TRACES OF GRINDING ONLY SMALLEST TRACES HARDLY VISIBLE TO THE NAKED EYE ARE PERMISSIBLE COMPARE WITH STANDARD.
9. EDGES OF HOLES E FROM INTERNAL SIDE OF THE SLEEVE SHOULD BE SHARP, FREE OF NICKS, ROUNDINGS, CHIPPING AND BURRS SHARP EDGES ARE NOT PERMITTED IN OTHER PLACES.
10. IT IS PERMITTED TO CARRY OUT FINAL GRINDING OF BUTT-END Б AFTER ARTIFICIAL AGEING.
11. TEST THE PART BY USING THE MAGNETIC FLAW-DETECTOR, CARRY OUT ACCEPTANCE IN COMPLIANCE WITH TECHNICAL REQUIREMENTS TT-VB - 17
12. STRAIGHTENING SHOULD NOT BE DONE WHEN PERFORMING ANY OPERATION.
13. SURFACES WHICH ARE NOT PROCESSED AFTER HEAT TREATMENT SHOULD BE THOROUGHLY CLEANED OF SCALE.
14. SUBJECT THE PART TO HEAT-TREATMENT, STABILIZING DIMENSIONS.
15. LOCAL LOWERING OF 0.03 MM OF SURFACE Г OVER A WIDTH OF 6 MM IN THE PLANE OF SUCTION HOLE AND GROOVE IS PERMITTED.
16. INSTEAD OF CHAMFER H, BLUNTING UPTO 0.7 MM IS PERMITTED.
17. APPLY THE FOLLOWING MARKINGS IN COMPLIANCE WITH DEVELOPMENT OF SURFACE Г
18. a) TRADE MARK OF MANUFACTURER :-
    b) DATA OF MANUFACTURE: YEAR (THE LAST TWO NUMERALS) AND MONTH.
    MARK BY ELECTRIC OR CHEMICAL METHOD
    MARK THE DATA BY USING TYPE no-3, GOST 2930-62
    MARKING SHOULD BE KEPT INTACT THROUGH OUT THE SERVICE-LIFE OF THE PUMP COMPONENT.
    COATING. CHEMICALLY OXIDIZED, OILED EXCEPT FOR SURFACE B AND Б (PART MAY NOT BE OXIDIZED)

    AFTER OXIDATION SURFACES WHICH ARE DATUM SURFACES FOR MACHINING THE PART MAY HAVE PARTIALLY, DAMAGED OXIDATION.
19. DIMENSION GIVEN IN SQUARE BRACKETS IS AS PER DARWING ASSY 327-07-1.

EXPLANATORY NOTE :

MATERIAL QUOTED STEEL ШХ15 GOST 801-78.

BALL BEARING STEEL WITH CHROMIUM (X) CONTENT 1.5% BY WEIGHT

CHEMICAL COMPOSITION :

CARBON	=	0.95 - 1.05
SILICON	=	0.17 - 0.37
MANGANESE	=	0.20 - 0.40
CHROMIUM	=	1.30 - 1.65
SULPHUR	=	0.02 (max)
PHOSPHORUS	=	0.027 (max)
NICKEL	=	0.30 (max)
COPPER	=	0.25 (max)
NICKEL & COPPER	=	0.50 (max)

NOTE

THE STEEL SHALL BE FREE FROM NON-METALLIC INCLUSIONS (CLEANLINESS OF BALL BEARING STEEL QUALITY) POROSITY, GASHOLES, DECARBURISATION AND OTHER METALLURGICAL DEFECTS LIKE CARBIDE NET-WORK & SEGREGATION

PILOT SAMPLE SHOULD BE APPROVED BY A H S P BEFORE BULK PRODUCTION

EST MASS 0.1 Kg	TO BE STAMPED OR MARKED WHERE INDICATED THUS # (LETTERS)
ALL SHARP EDGES AND CORNERS TO BE REMOVED UNLESS OTHERWISE STATED MACHINED CORNERS TO HAVE R OUTSIDE R INSIDE EQUIVALENT CHAMFERS ARE PERMISSIBLE.	

ISSUE	DATE	NATURE OF AMENDMENTS

DRN		MATERIAL - STEEL ШХ15 GOST 801-78
CHD		USED ON - СБ 327-07-1
TCD		
APPD		CONTROLLERATE OF QUALITY ASSURANCE (HEAVY VEHICLES) AVADI
DATE	6-3-87	
SCALE - 2:1		
DIMENSIONS IN mm		TITLE PLUNGER SLEEVE
TOLERANCE ON DIMNS UNLESS OTHERWISE STATED IS 2102-69		
ALL THREADS TO CONFORM TO		D S CAT NUMBER / DRAWING NUMBER 327-58-1

IFC 002

20-27

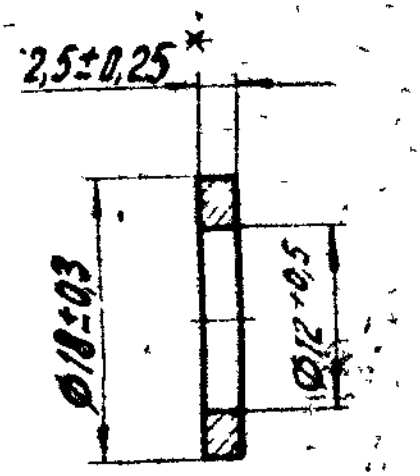

1. DIMENSIONS ARE PROVIDED WITH TOOLS

2 * DIMENSION IS GIVEN FFOR REFERENCE.

* CБ 327-00-45

PILOT SAMPLE SHOULD BE APPROVED BY A H S P BEFORE BULK PRO[illegible]N

ISSUE	DATE	NATURE OF AMENDMENTS	
DRN		SCALE - 2 : 1	
CHD		DIMENSIONS IN [illegible]	
TCD		TOLERANCE ON DIMNS UNLESS OTHERWISE STATED	
APPD			
DATE 24-04-87		ALL THREADS CONFORM TO	

EST MASS 0 0004 Kg

TO BE STAMPED OR MARKED WHERE INDICATED THUS ⊞ (LETTERS)

ALL SHARP EDGES AND CORNERS TO BE REMOVED UNLESS OTHERWISE STATED MACHINED CORNERS TO HAVE R OUTSIDE R INSIDE EQUIVALENT CHAMFERS ARE PERMISSIBLE

MATERIAL - FIBRE ФТ 2 5 GOST 14613-69

USED ON - CБ 3327-[illegible] T/-2 * CБ 327-07-1

CONTROLLERATE OF INSPECTION (HEAVY VEHICLES) AVADI

TITLE - GASKET 2.5 mm or 1.5mm

D S CAT NUMBER

DRAWING NUMBER 329-31A

DRAWING NUMBER
340-183

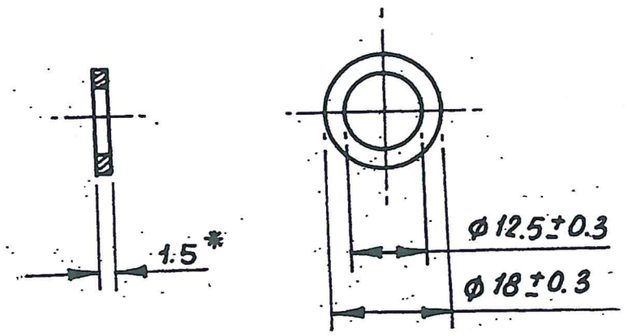

1. ALTERNATE MATERIAL IS BINDERS BOARD 1.5 TO 3mm THICK, GOST 7950-77, CALIBRATED BOARD 1.5 TO 3mm THICK, GOST 1933-73 OR GASKET BOARD A 1.5 GOST 9347-74
2. * DIMENSIONS ARE GIVEN FOR REFERENCE.

EXPLANATORY NOTE:

MATERIAL QUOTED : Б 1.5 GOST 9347-74
Б = GRADE OF CARD BOARD MATERIAL (UNIMPREGNATED)
1.5 = THICKNESS OF CARD BOARD

TECHNICAL PARAMETER :

1. ABSORPTIVITY, AFTER 6 HOURS OF COMPLETE IMMERSION IN WATER % = ~~60 (MAX)~~ 120 (MAX) (A)
2. ULTIMATE TENSILE STRENGTH IN TRANSVERSE DIRECTION Kgf/mm² = ~~1.4 (MIN)~~ 1.6 (MIN) (A)
3. LINEAR DEFORMATION IN TRANSVERSE DIRECTION AFTER HOLDING THE SAMPLE IN HYDROSTAT FOR 24 HOURS % = 0.8 (MAX)
4. MOISTURE CONTENT % = ~~12 ± 2~~ 10 ± 2 (A)
5. ~~COMPRESSIBILITY UNDER A LOAD OF 70 Kgf/cm² % = 12-25~~ (A)
6. ~~ELASTIC DEFORMATION AFTER REMOVING THE LOAD % = 45 (MIN)~~ (A)

EXPLANATORY NOTE ADDED ON 18-6-92

PILOT SAMPLE SHOULD BE APPROVED BY A H S P BEFORE BULK PRODUCTION

EST. WT. 0.003 Kg.

TO BE STAMPED OR MARKED WHERE INDICATED THUS # (LETTERS)

ALL SHARP EDGES AND CORNERS TO BE REMOVED UNLESS OTHERWISE STATED MACHINED CORNERS TO HAVE R OUT SIDE R INSIDE EQUIVALENT CHAMFERS ARE PERMISSIBLE.

ISSUE	DATE	NATURE OF AMENDMENTS
A	20.11.18	D.O CORRECTION.

DRN	
CHD	
TCD	
APPD	
DATE	24-4-87
SCALE:-	1:1
DIMENSIONS IN mm	
TOLERANCE ON DIMNS UNLESS OTHERWISE STATED IS : 2102-69.	
ALL THREADS TO CONFORM TO	

MATERIAL:- Б 1.5 GOST 9347-74

USED ON C6327-07-2

CONTROLLERATE OF QUALITY ASSURANCE (HEAVY VEHICLES) AVADI.

TITLE GASKET

D S CAT NUMBER

DRAWING NUMBER 340-183

ZE A3