DIMENSIONS ARE IN mm.
DRAFT ANGLE FOR HOLES 1°
CASTING RADII R 1mm

UNTOLERATED DIMNS ARE AS PER S : 11166-1984 CLASS I OF INVESTMENT CASTING. CASTING TO BE SUPPLIED IN NORMALISED CONDITION.

MATERIAL:-
BS:3146 PART -1: 1974
TYPE - CLASS: 5 GRADE-A.

CASTING SHOULD BE FREE FROM DEFECTS LIKE CRACKS. SURFACE FINISH MUST BE SMOOTH.

(NON- STRESSED COMPONENT)

RADIOGRAPHIC TEST AS PER ASTM-E-192

TEN NUMBERS OF SAMPLES TO BE SUPPLIED FOR QUALITY CLEARANCE AT OFT BEFORE BULK SUPPLY

ACCEPTENCE STANDARD:-
GAS HOLE & FOREIGN MATERIAL: LEVEL-5.
SHRINKAGE (ALL TYPES) - LEVEL 3

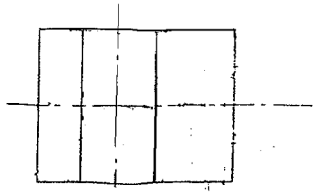

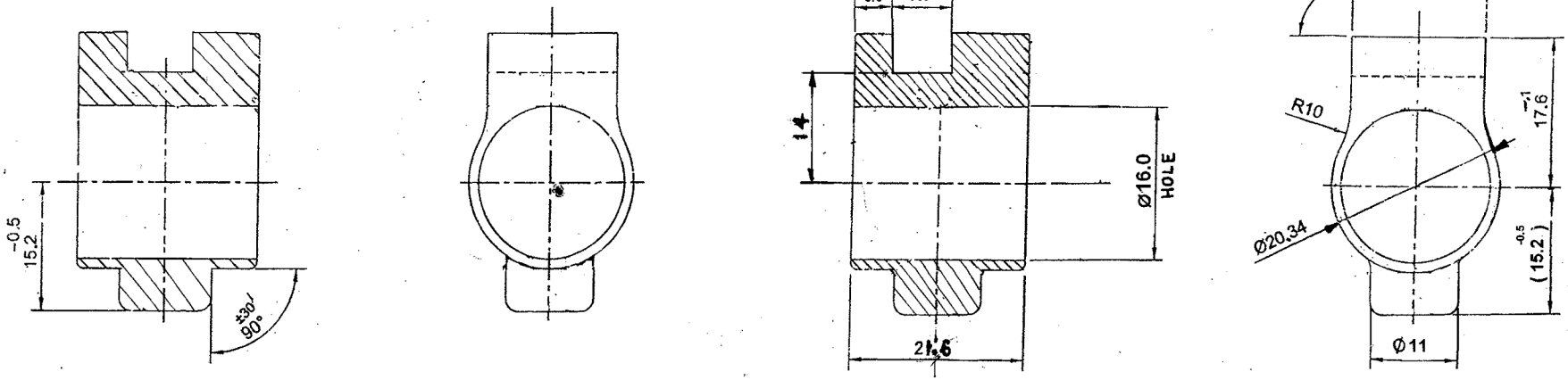

HOS/PS-4

PART NO.	DESCRIPTIONS	NO OFF	MATERIAL	TREATMENT	REMARKS

SIGNATURE & DATE.	SUB: INVESTMENT CASTING		SCALE 2:1
TRACED	FOR: BAND BACK SIGHT		
DRAWN	OF: 0.315 SPORTING RIFLE		STORE DRG.NO.
CHECKED	DES.REF.NO. 29P 0005*		
HOS/D&DO	DRG. No.: TEND: 2310		OPERATION NO.
OFFICER/ PRODN.	ORDNANCE FACTORY TIRUCHIRAPPALLI-16.		
OFFICER/ D&DO			SHEETS: 01
APPROVED ON. 04/2014			SHEET No.: 01

AMENDMENTS	SIG. & DATE