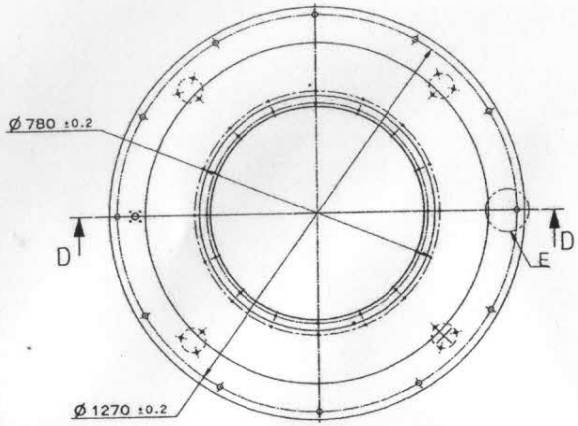

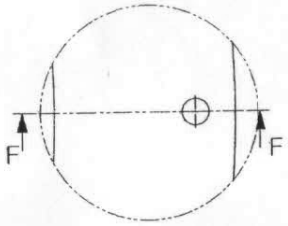

DETAIL E
SCALE 1:2

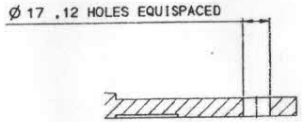

SECTION F-F

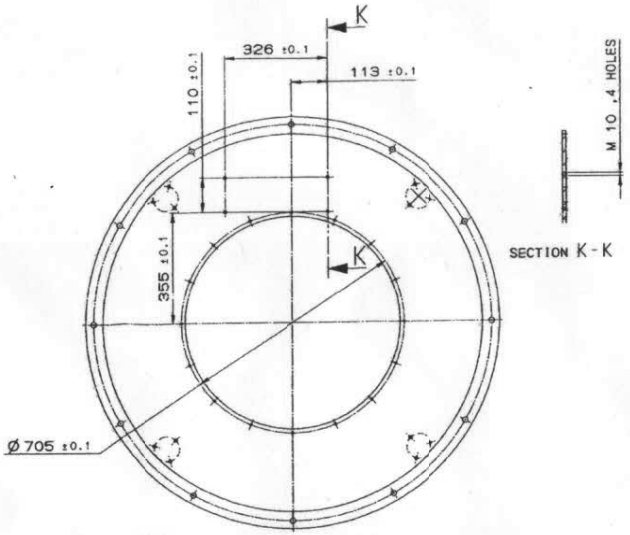

SECTION K-K

NOTE:-
1. FOR TRAINING END LIMITS HOLE POSITION REFER DGR.NO.DW-1179
2. M16 - 4 HOLES EQUISPACED TO BE MADE ON PCD 1270 FOR LIFTING.
3. M10-3 HOLES TO BE DONE IN ASSY FOR LRMR LAUNCHER

** TO BE MANUFACTURED FROM DW-1108-0210-41

* PHOSPHATING AND PAINTING
1. PHOSPHATING TO BE DONE AS PER IS:3618 CLASS B
2. PRIMER RED OXIDE TO STANDARD IS:12744 TO BE APPLIED BY FIRM WHO IS SUPPLYING STORE TO MPFAS PER DW-1134
3. PAINTING TO BE DONE AT MPF IN OR DURING ASSEMBLY AS PER DW-1134
4. DO NOT APPLY PRIMER AND PANT ON THREAD AND BORE SURFACE

▽▽ (▽▽▽)

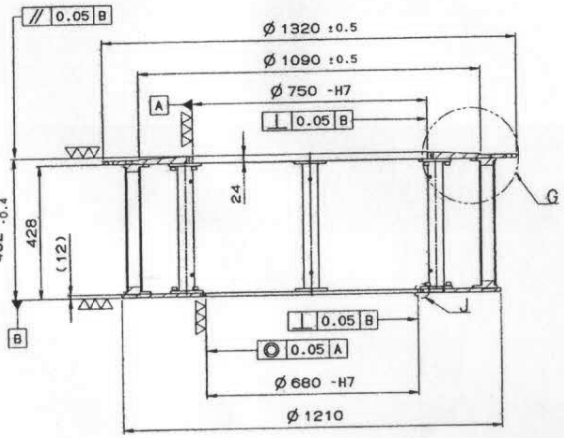

SECTION D-D

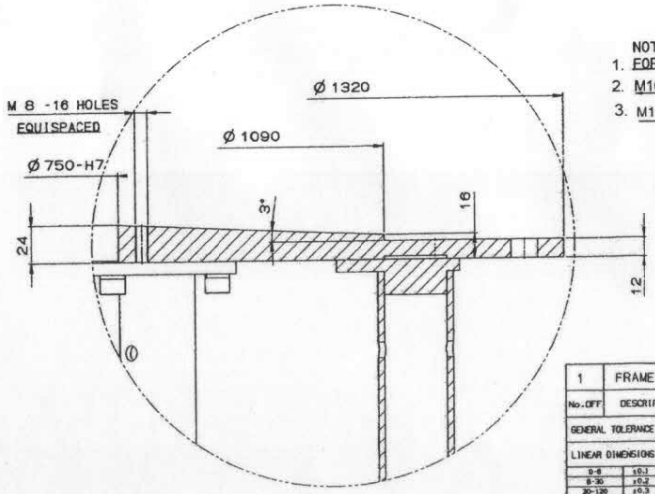

DETAIL G
SCALE - 1:2

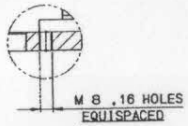

DETAIL J
SCALE 1:2

No.OFF	DESCRIPTION	PART No.	MATERIAL	STANDARD	DIMENSIONS	REMARKS
1	FRAME		**			*

GENERAL TOLERANCE

LINEAR DIMENSIONS

0-6	±0.1
6-30	±0.2
30-120	±0.3
120-315	±0.5
315-1000	±0.8
1000-2000	±1.2

ANGULAR DIMENSION

1-10	±1°
10-50	±30'
50-100	±20'
>100	±10'

VALUE IN "us"

~	>25
▽	6-25
▽▽	1.6-6
▽▽▽	0.025-1.6
▽▽▽▽	<0.025

No.OFF	DRG. No. OF ASSOCATED PART	INDEX	ALTERATION	DATE	NAME

Ø 20-H7	+0.021 0
Ø 680-H7	+0.08 0
Ø 750-H7	+0.08 0
NOMINAL SIZE & FIT	DEVIATION

FRAME
FRAME ASSY
LR-MR LAUNCHER
KAVACH MCD-II

MACHINE TOOL PROTOTYPE FACTORY, AMBERNATH

Design Office

SCALE	DRAWN	01.12.98	Tvijay
1:1 1:2	CHECKED	"	
	APPROVED		
REPLACED BY			
REPLACED FOR			

DRAWING No. DW-1108-0210-12

THE COPYRIGHT OF THESE DRAWINGS AND ATTACHMENTS TO THE INDIAN ORDNANCE FACORIES, MINISTRY OF DEFENCE, GOVT. OF INDIA THEY SHOULD NOT BE COPIED,RE-PRODUCED IN ANY WAY OR THE INFORMATION CONTAINED THEREIN MADE AVAILABLE TO UNAUTHORISED PERSONES WITHOUT THE WRITTEN PERMISSION OF THE DIRECTOR OF ORDNANCE FACTORIES.