DRAWING NUMBER 172.01.638-4 | SHEET No. 1 OF 1

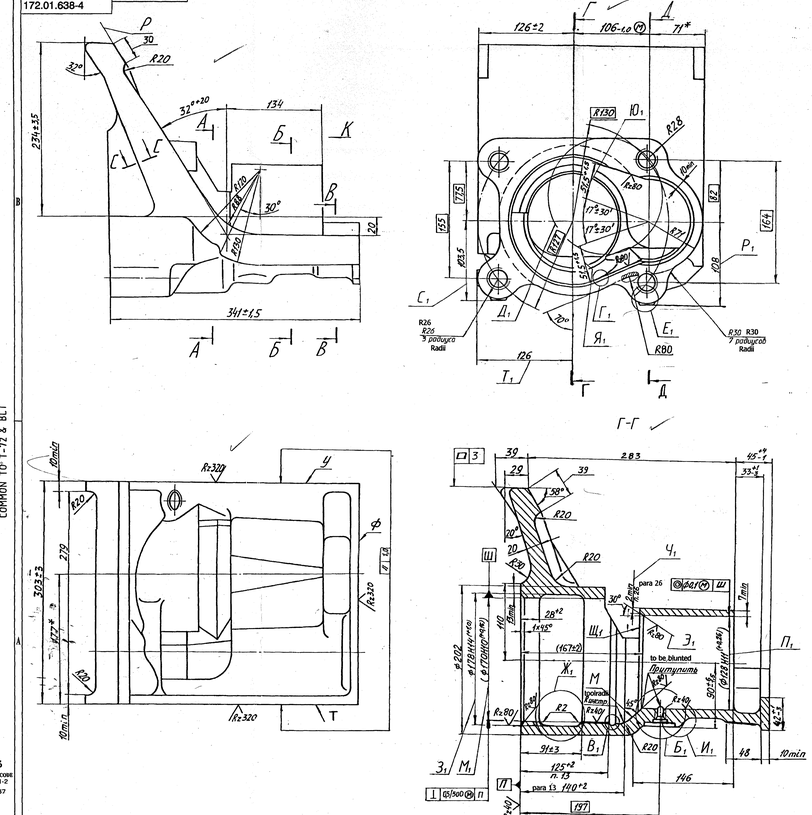

1. Grade of steel, heat treatment method of acceptance and testing should comply with the list of components made of special steel Hardness medium. 172-TY5.
2. Requirement for casting as per 520-TY-5. In non easily accessible places and in mating places presence of burn on (sand buckle) are allowed.
3. Accuracy of casting 11T-0-0-9 GOST26645-85.
4. External draft 1:50.
5. Dimension given in brackets are after welding bracket on hull.
7. Decrease of inner diameter of threaded hole $Л_1$ (see Д-Д) is allowed by $0^{+0.2}$ mm above the tolerence and screwing in of no-go gauge to depth not exceeding 8mm is allowed.
8. Along dimension $З_1$ shoulder by $0^{-0.1}$ mm (see Г-Г) is allowed.
9. On surface M shoulder by 0^{+}mm (see Г-Г) is allowed.
10. Presence of technological ribs with section 3mm×5mm are allowed in places of changing over from side ribs to front wall, from the inner side .
12. Dimension for threaded hole $Л_1$ (see Д-Д) should be not less than 7mm over distance of 10mm from surface П (see Г-Г) for the rest of the length should be not less than 9mm.
13. Dimension $Н_1$ (see Г-Г) with surface finishing Rz=40 microns should be maintained on the length of 125^{+} mm, for the rest of the length dimension Ø168H14$^{(+1.0)}$ mm may be maintained with the surface finishing Rz=80 microns. In this case groove $Н_1$ (see $Б_1$) may not be made.
14. After measuring the technological lug shoulder is allowed between machined and casting surfaces by $0^{+0.5}$ mm.
15. Dimension $П_1$ is to be checked at a distance not less than 321mm from surface П(see Г-Г).
16. On surface П (see Г-Г) tool marks with depth $0^{+0.2}$mm is allowed.
17. On surfaces P(see view from the right), technological allowance with value not more them 10mm is allowed.
18. Coming out of drill to the thread of hole $Л_1$ (see Д-Д)to the outsale is allowed.
19. Once in a month components is to be checked at random as per the weight . Maximum permissible weight is 48kg.
20. Lugs designated with dot and dash lines with dimension $Р_1$,$С_1$,$Т_1$,Y_1, $Ф_1$(see main view ,$Е_1$) are allowed to make along the entire length.
21. *Dimension for reference.
22. On surfaces Y , $Ф_1$,T,(see view from the top), sections without rectifying the casting surfaces with total area of not more than 25%are allowed.
23. Value of projection A,(see Д-Д) need not to be checked .
24. Other requirement as per 520 TY1.
25. **Dimension and surface finishing are to be ensured by tool.
26. For ensuring dimension $Ч_1$ (see Г-Г), machining of surface $Ш_1$ is allowed with surface finishing Rz=80 microns within the limit of tolerence zone for dimension $Ш_1$ (See Д-Д).
27. When machining dimension $Д_1$ (see Б-Б) on surface of chamfer $Э_1$ Local incision along surface $Ш_1$ (see Г-Г) is allowed . Edge of incision is to be blunted up to dimension $Ч_1$ (see Г-Г) in that case width of chamfer $Э_1$ in the place of incision should be not less than 6mm.
28. C $Ж_1$ (see main view)black spot are allowed by not e 1/3rd of the total area .

CONTROL No: 2157
RESTRICTED
without written copy of sealed copy of "Rosoboronexport" is not valid
Ø APR 2010
Head Unit
CONTROLLER
Corporation "Rosoboronexport"
Russian Federation
Moscow, Stromynka 15

PILOT SAMPLE SHOULD BE APPROVED BY A H S P BEFORE BULK PRODUCTION.

EST. WT. (kg)	TO BE STAMPED OR MARKED WHERE INDICATED THUS # (LETTERS)
44.88	

ALL SHARP EDGES AND CORNERS TO BE REMOVED UNLESS OTHERWISE STATED MACHINED CORNERS TO HAVE R OUT-SIDE & INSIDE EQUIVALENT CHAMFERS ARE PERMISSIBLE.

ISSUE	DATE	NATURE OF AMENDMENTS
1A	07-08-28	D.O. CORRECTION.

DRN		MATERIAL:- SPECIAL STEEL
CHD		
APPD		CONTROLLERATE OF QUALITY ASSURANCE (HEAVY VEHICLES) AVADI
DATE	21-4-09	
SCALE:- 1 : 2		
DIMENSIONS IN mm		TITLE:- 3RD L.H. AND R.H. SUPPORT OF ROAD WHEEL ARM
TOLERANCE ON DIMNS UNLESS OTHERWISE STATED IS : 2102-69		
ALL THREADS TO CONFORM TO		D S CAT NUMBER

USED ON:- 172.01.24-013-ACD
172.01.24-019-TCS

DRAWING NUMBER 172.01.638-4

DRD. NORMISED BASED ON RUSSIAN ORIGINAL. ISSUE:-10
COMMON TO: T-72 & BLT

356
SUPPLY CODE
L/D1-1-2
D90037

F-58
24

SIZE A2x4