DRG NO. 0 2 0 4 0 3 0 4 0 0 0 3 0 0 1 0 0 D A

GENERAL TOL. : FINE / MEDIUM / COARSE
CLASS TO IS: 2102

DRG. CONVENTIONS CONFIRM TO INDAN STANDARDS
DIMENSIONS ARE IN mm UNLESS OTHERWISE STATED.

NOTES:-

1) REMOVE ALL SHARP EDGES AND BURRS.
2) DIMENSIONS ARE TO BE READ AS APPLIED AFTER PROTECTIVE COATING.
3)ALL PROTECTIVE COATING - PHOSPHATED TO SPECN. IS:3618-1966. CLASS 'B'
3) HARDENED AND TEMPERED TO 260-310 HV.

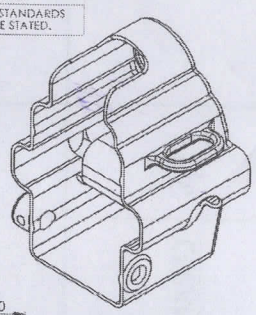

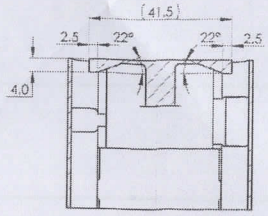

SECTION C-C

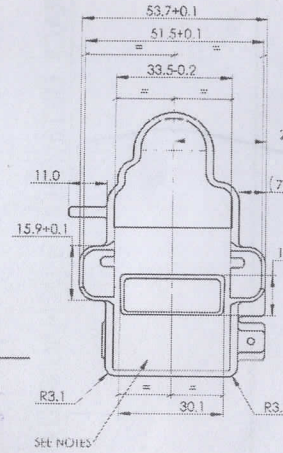

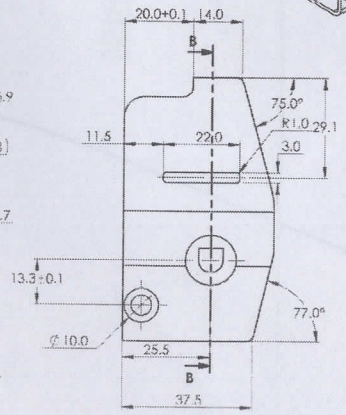

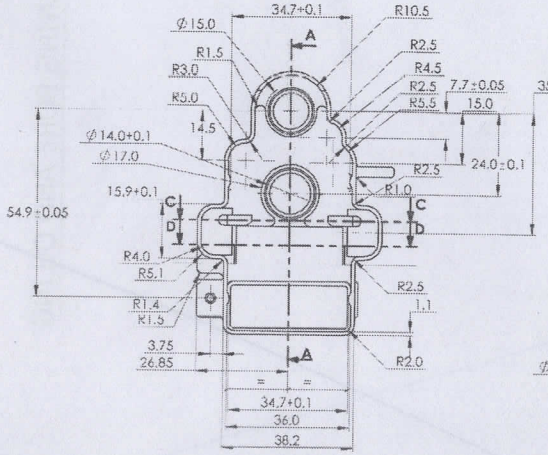

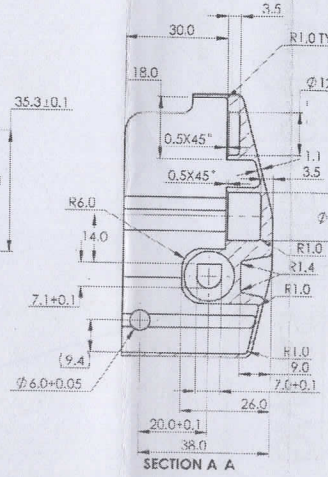

SECTION A A

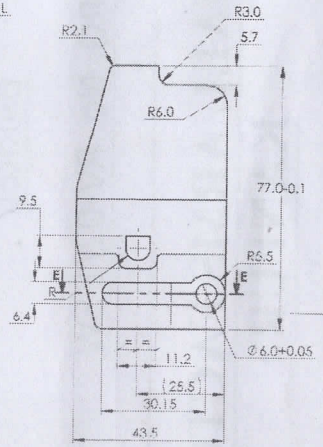

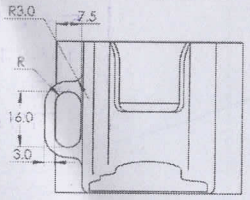

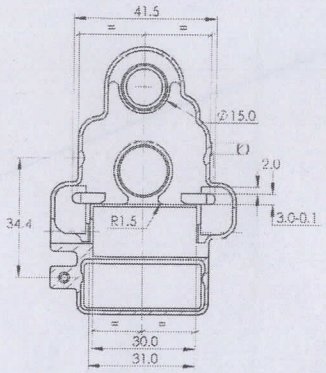

SECTION B-B

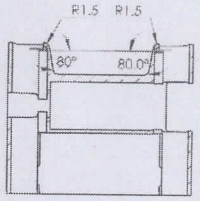

SECTION D-D

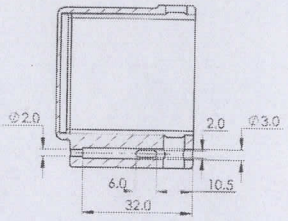

SECTION E-E

Sr. No.	DATE	AUTHORITY	BRIEF RECORD	ZONE	CD	SIGN
DRN: ANKIT			MATERIAL: STEEL TO IS : 5517-1993, Gd. 55C8			
SIGN:						
DATE: 07/03/2019		CHECKED				
APPD:			PROTECTIVE FINISH: ELECTROLESS NICKEL-BN COATING AS PER ARDE SPECN. NO: ARDE/SA/2016/COATING-02			
DATE: 07/03/2019		DGM DIRECTOR				
SEALED DATE:						
SHEET SIZE: A2	EST. MASS 143.31 gm		TITLE: CLOSING CUP			
SCALE: 1:1						
DESIGN AUTHORITY ARDE PUNE 411021						

DRG No. 0 2 0 4 0 3 0 4 0 0 0 3 0 0 1 0 0 D A

JVPC | PART No. | DS CAT No | AHSP

HOS/MCO
21/01/23