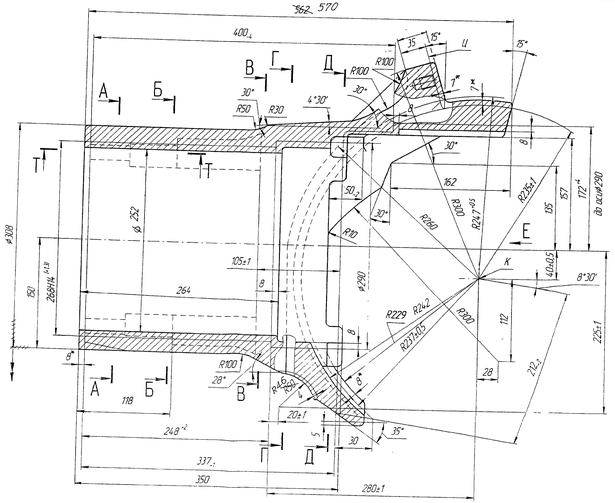

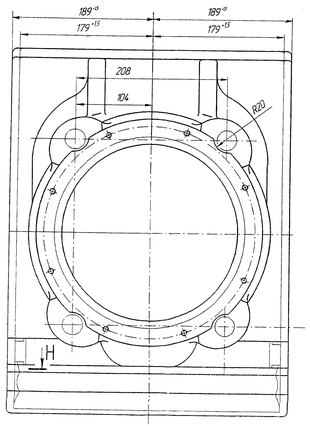

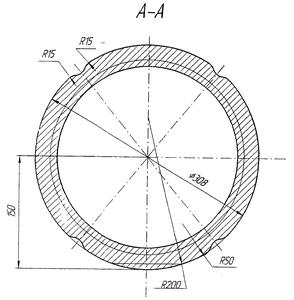

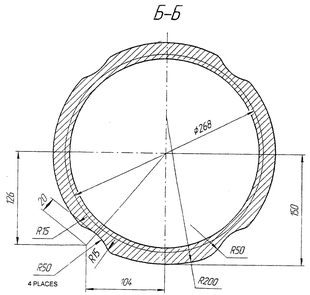

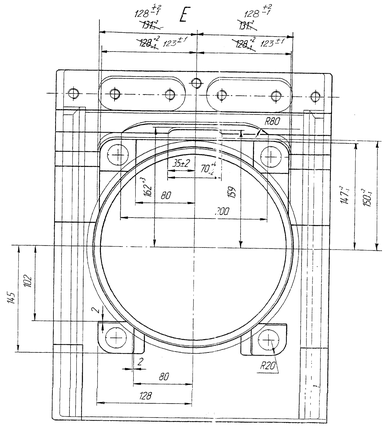

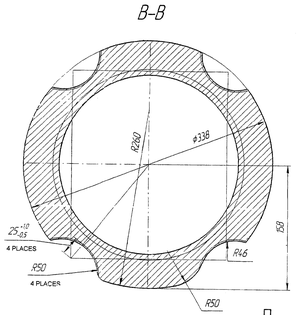

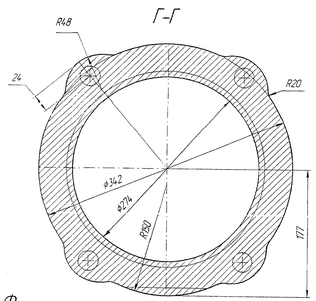

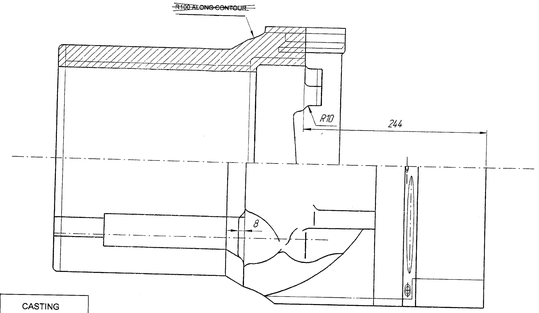

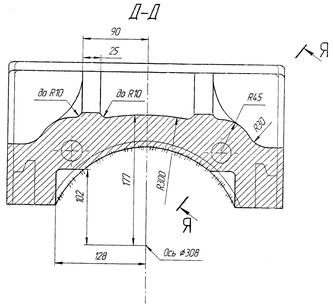

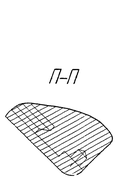

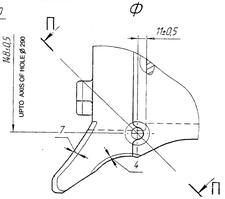

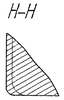

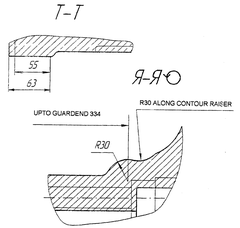

1. STEEL GRADE HEAT-TREATMENT AND METHOD OF ACCEPTANCE AS PER LIST FOR COMPONENT FROM SPECIAL STEEL MEDIUM HARDNESS.
2. CONTOUR OF COMPONENT IS TO BE DETERMINED BY THE DIMENSIONS IN EACH CROSS SECTION AND SMOOTHLY PASSES FROM ONE CROSS SECTION TO ANOTHER.
3. POSTION OF AXIS K IS DETERMINED BY THE DIMENSIONS R242:40 $^{+}_{0}$.5.
4. DIMENSIONS WITHOUT TOLERANCE SHOULD BE WITH ACCURACY ± 2.5MM.
5. UNSPCIFIED CASTING RADII UPTO 5 MM TO BE CHECKED IN PATTERN.
6. REQUIREMENTS FOR CASTING AS PER 172TY5.
7. SCALE 1:2
8. WEIGHT OF CASTING 130 KG.
9. DIMENSIONS FOR REFERENCE.

APPROVED
Material Officer (CA)
(TECH CELL)
21/11/95

Ae 22/11/05
Jain/08

172-20-047-1 / C	CASTING	
GUARD SYSTEM		

MATERIAL	CASTING WT	T 90
	130 KG	
ALT. MATERIAL	HAMMER	SCALE
		1:2
DRAWN	CHECKED	APPROVED

DRAWING NO. 172-20-047-1 / C
NOMENCLATURE: GUARD SYSTEM

HEAVY VEHICLES FACTORY