ECKA

4-26941-Д-3Д6 015

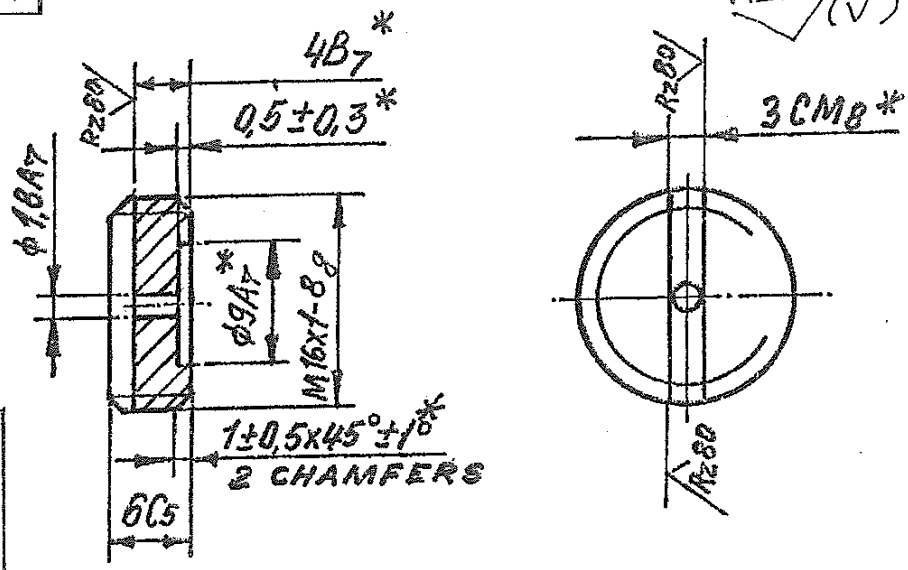


1. Permitted :
   a) Bar Д16 TKP 18 П
   b) Bar Д16 KP 18 18H, Д16 MP 18-П, GOST 21488-76.
2.* Dimensions ensured by tool.
3. Coating : anodic oxidation chromium.
4. For the rest of Technical requirements, refer to OST B84-186-70.

| MATERIAL | SPECIFICATION No | APPROVED/ALTERNATIVE INDIGENOUS EQUIVALENTS |
|---|---|---|
| ALUMINIUM BAR | 1) GOST 21488-76 | IS 733, GRADE 24345 IN 'WP' CONDITION OR BS 1474, GRADE 2014A IN T6 CONDITION. |

PROTECTIVE TREATMENT : ANODISING TO SPEC. DEF. 151

| REV No | DATE | AUTHORITY | REVISION | ZONE | AHSP | SIG. |
|---|---|---|---|---|---|---|
| | 20-12-94 | D.C.35878-A. | NEW DETAILS RE. MATERIAL AND PROTECTIVE TREATMENT INCORPORATED | | | |
| | 17-11-87 | DC 34269-A | SCALE & EST. MASS ADDED. | | | |
| | 4-6-85 | D.C.1.33760-A | DRAWING SEALED PROV. | | | |

SCALE:- 2:1

EST. MASS:- 0.003 kg.

APPD. Sawnell FOR C.I.(A)

AHSP :- CQA(A) KIRKEE

4-26941 3D6 015

# SECURING NUT

Bar D 16 T KP 18-H
GOST 21488-76