DRG. CONVENTIONS CONFORM TO IS: 696.
DIMN. ARE IN mm

PART No IQX 799

D.C.I. 3346

THIS IS THE MOST IMPORTANT CORNER AS IT IS THE WORKING EDGE AND MUST BE TRUE AND SHARP.

INSPECTOR'S REFERENCE ONLY.

NOTE.
TOLERANCE ON UNTOLERANCED DIMENSIONS FOR ONE DECIMAL PLACE ± 1·3 FOR TWO OR MORE DECIMAL PLACES ± 0·13. TOLERANCE ON UNTOLERANCED ANGLES FOR DEGREES ± 30' FOR DEGREES AND MINUTES ± 5

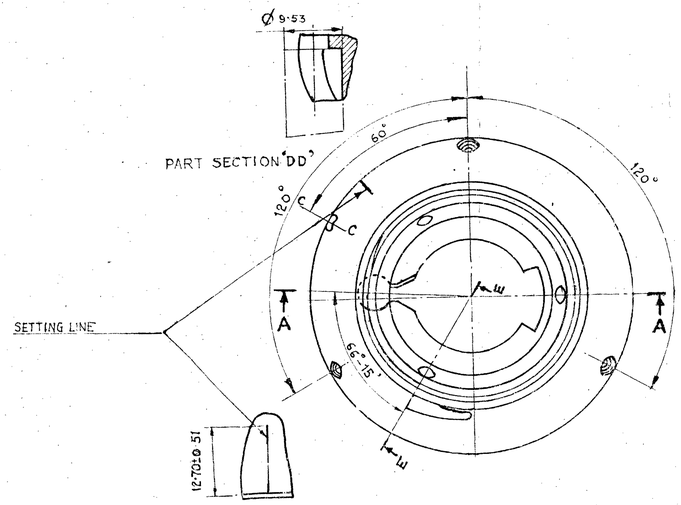

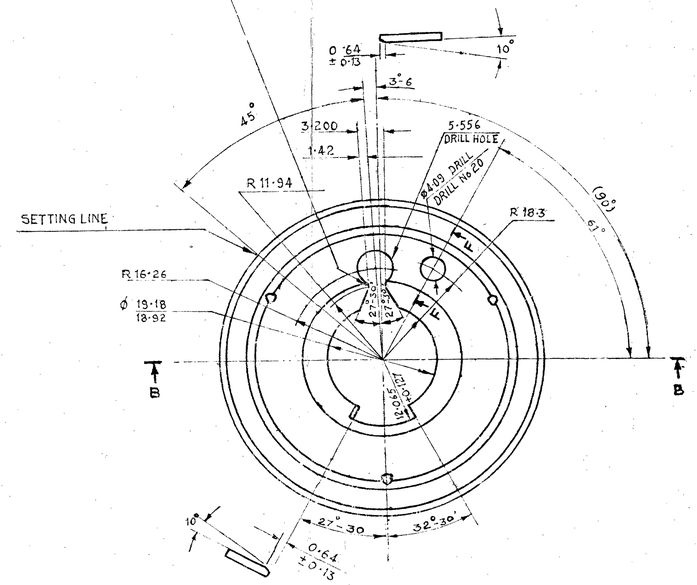

INVERTED PLAN

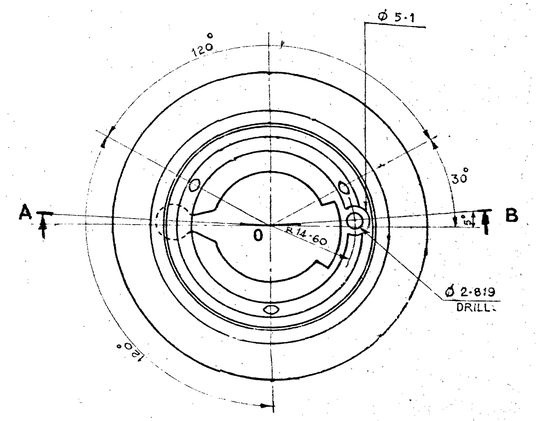

36·780 X 20 TP 25·4 WHIT FORM
MED. CLASS.
MAJOR DIA 36·780 MIN.
EFFECTIVE DIA 35·966 + 0·14
MINOR DIA 35·154 + 0·432
0·051 TRUNCATION PERMITED.

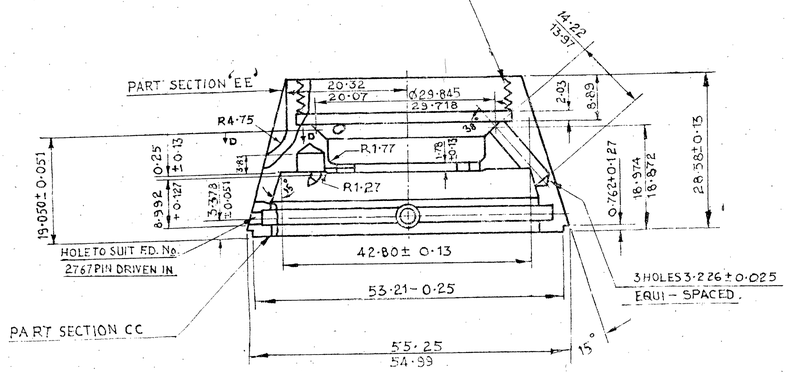

SECTION 'A A'

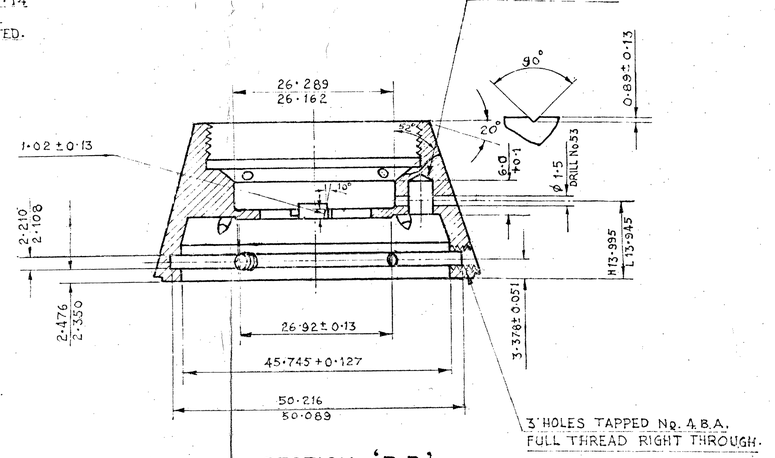

SECTION 'B B'

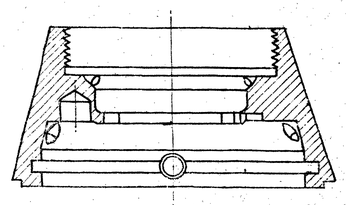

SECTION "A O B"

ALTERNATIVE METHOD OF MANUFACTURE INCORPORATING HOLE FOR TRIGGER ARMING

PROTECTIVE FINISH :- TO BE ANODISED TO DEF 151 TYPE 1 & R2 (SULPHURIC ACID PROCESS)

NOTE :- DIMENSIONS APPLY AFTER ANODISING

R No	DATE	AUTHORITY	BRIEF RECORD	ZONE	AHSP	D.O.
	5-1-05		SCANNED WITHOUT CHANGE.			
3	9.9.88	DC 34450-A	ALT. PROTECTIVE FINISH ADDED			
2	27.6.87	DCI. 34168-A	DS CAT No ADDED.			
1	20.7.83	D.C.I. 33461-A	DRG. SEALED PROVISIONALLY			

DRG. SEALED : 20-7-83 (PROV.) APPROVED FOR C.I.(A)

DRN	CHD	TRD BMN	COMP
CD	PASSED	SCALE 2:1	
APPROVED FOR INSPECTOR		EST WEIGHT	
		GAUGE SCHD	
		DATE 4-3-83	

MATL:- AL ALLOY TO SPEC IS: 733, 24345 W OR W.P
PROTECTIVE FINISH AS ABOVE

ASSY DRG IQX 80 A
DESIGN AUTHORITY
ARDE PUNE 21
DESIGNERS REF ARDE 1967
DET No 15
PART No IQX 799
DS CAT No 1390-000538
AHSP C I (A) KIRKEE

DOME