ALL DIMENSIONS ARE IN MM.

IF IN DOUBT PLEASE ASK.

* NOTE:

* SUPPLY CONDITION PRE-MACHINED
(1) O/S DIA. 201/201.5
(2) I/S DIA. 70/70.5

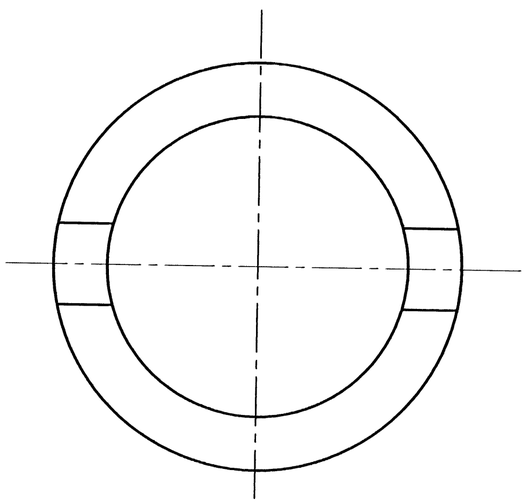

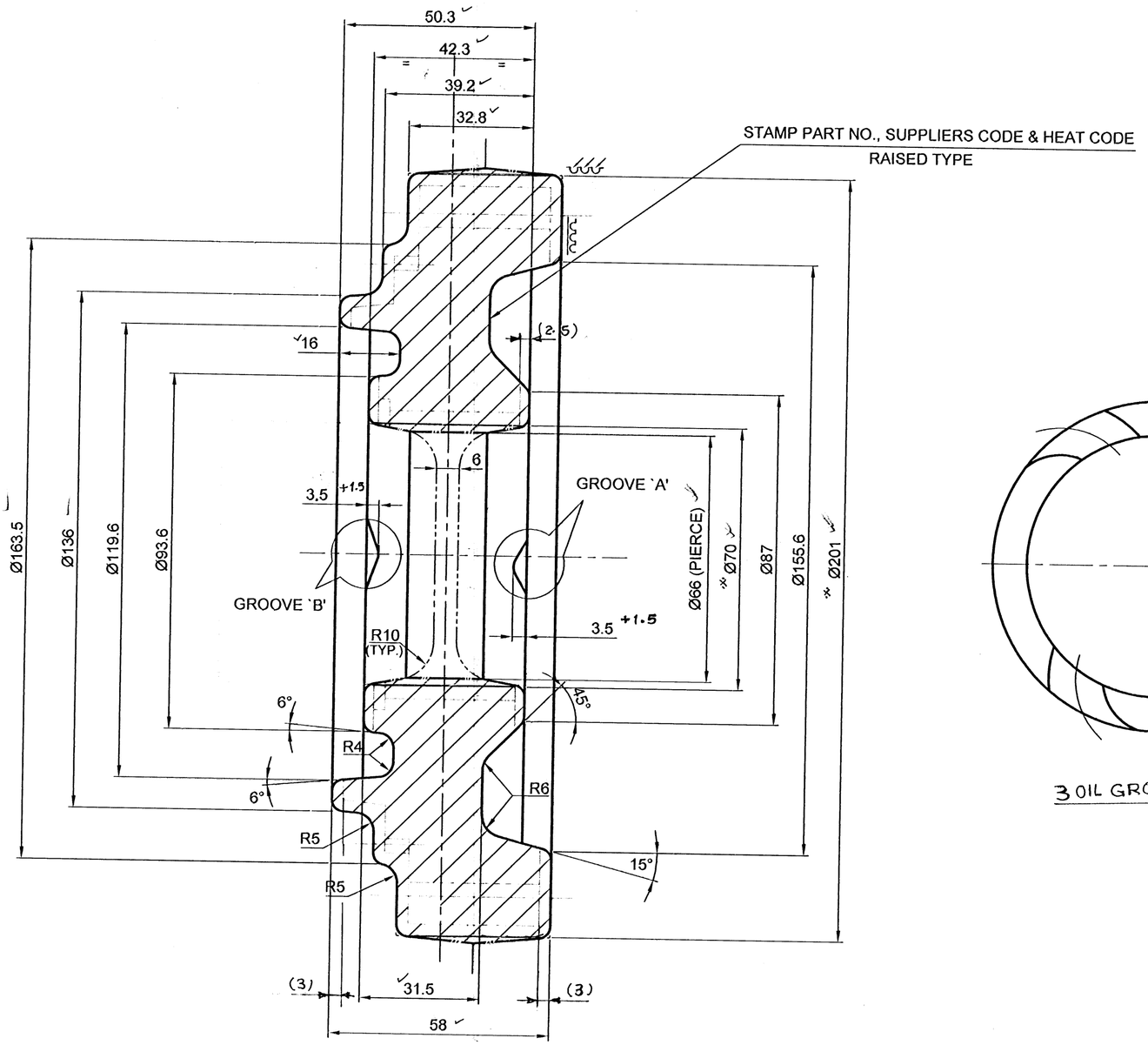

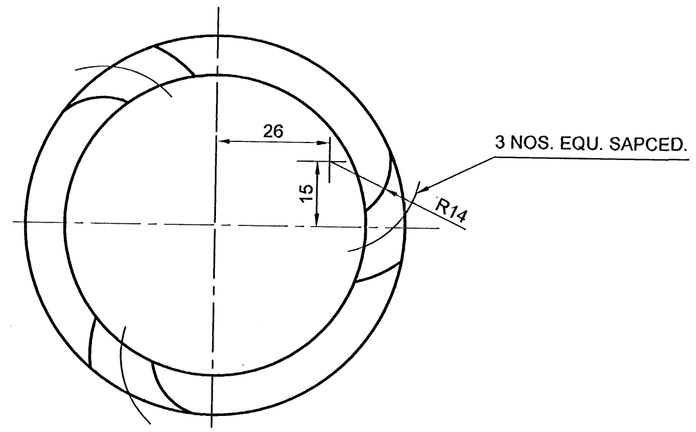

3 OIL GROOVE 'A'

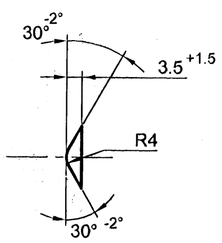

DETAIL
3 OIL GROOVE `A'

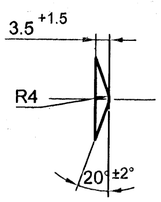

DETAIL
2 OIL GROOVE `B'

NOTE:

1. FORGING RIDGES TO BE TRIMMED CLEAN & SMOOTH FINISH ALL OVER.
2. FORGING TO BE SHOT BLASTED & SUPPLIED AFTER APPLYING RED OXIDE PRIMER TO JSS:3 - 47-13 BY BRUSHING OR SPRAYING.
3. SAMPLE TO BE APPROVED BEFORE BULK SUPPLY.
4. STEEL SHOULD BE FREE FROM CENTRE , SEGREGATION,PIPING,FLAKES ETC.
5. DIMS. IN BRACKET INDICATES MACHINING . ALLOWANCE.
6. CLAMPING FACE / STOP FACE } FOR 1st MACHINING - OPERATION .
7. DRAFT ANGLE: INNER - 7°, OUTER - 5°
8. UNSPECIFIED RADII: CORNER - 2R, FILLET - 3R

MATERIAL: 815 M17(En 353)OF BS-970

HARDENABILITY : JOMINY HARDENABILITY VALUE OF J 6/16"=35 TO 39 HRC (FOR TEST PIECE)

COMP.OF En353 :
C 0.14-0.20, SI 0.35MAX.,Mn 0.50-1.00,S 0.015-0.04, P 0.035MAX,Ni 1.0-1.5,Cr 0.75-1.25,Mo 0.08-0.15
PHYS.PROP.:

HEAT-TREATMENT: ISO THERMAL ANNEALING .
HARDNESS: 150 - 210 BHN
MICRO STRUCTURE:
UNIFORM LAMELLER PEARLITE & FERRITE BAINITE & INTERMEDIATE STRUCTURE 10% MAXIMUM.
EXCESSIVE BANDING IS NOT ACCEPTABLE IF BANDING IS PRESENT,MINIMUM NUMBER OF BANDS/mm SHALL BE 14 (WHEN VIEWED AT 100X MAGNIFICATION)
GRAIN SIZE: ASTM 5 - 8
INCLUSION RATING: 3A,3B,3C,3D MAX. OF IS 4163

FORGING TOLERANCE AS PER IS : 3469 - 1974

FORGING WEIGHT (APPROX)	ENVELOP WEIGHT	COMPLE-XITY	INTRAC OF MATL.	FORGING GRADE
7.5 KG				NORMAL

KIND OF DIMS.	TOL.	KIND OF DIMS.	TOL.
DIE WEAR (TOTAL) LENGTH/DIA	+1.5 -0.4	RESIDUAL FLASH	
THICKNESS	+1.5 -0.0	TRIMMED FLAT	
MISMATCH	0.8	DRAFT ANGLE	+2° -1°
STRAIGHTNESS	0.6	RADII	+50% -25%

INTERNAL DIMS. REVERSE SIGN + & -

INDEX	ALTERATION	DATE	SIGN.

FORGING DRAWING
FOR
1st SPEED GEAR ON M/S.
STLN.MK-IV

VEHICLE FACTORY JABALPUR

R.C.R. KOLTE JWM / DDO	JWM/GS	APPD.
S.GUPTA DRN.	TCD.	DGM/GS DO/PROD.
REF. DRG. F1668001 SAMPLE		1 : 1 SCALE
M /C.	DDO SECTION	29/01/2014 DATE
DEMANDED BY		1/1 SHT. A2
DRG. NO. F1668011-3		