DRAWING NUMBER **306-94-21** | SHEET No. 1 OF 1

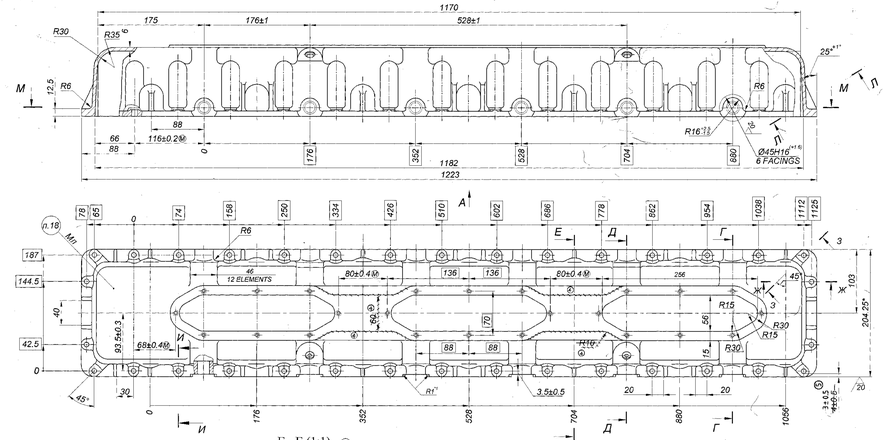

Е - Е (1:1)

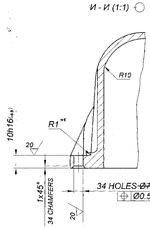

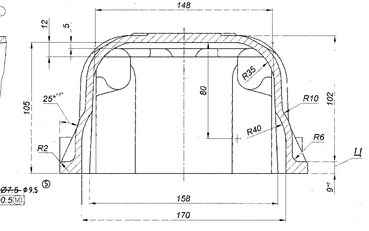

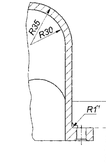

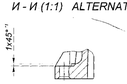

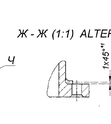

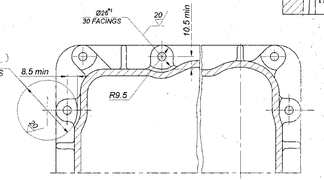

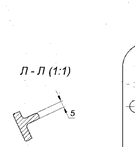

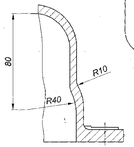

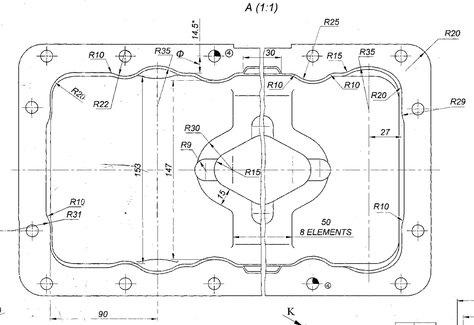

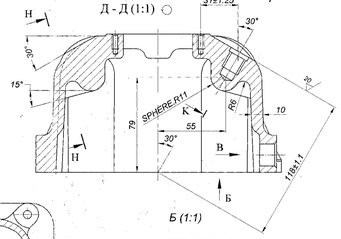

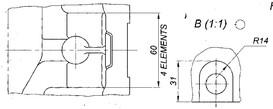

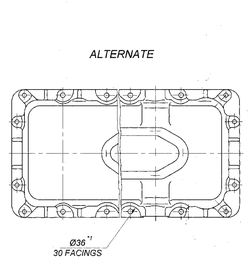

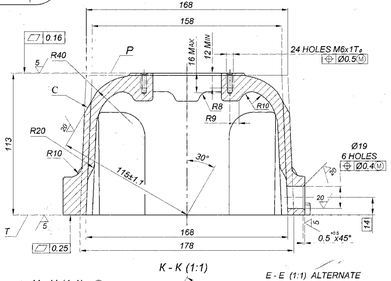

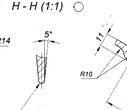

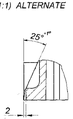

1. Requirement for casting should be as per TTM-27-87
2. Alternate material АК7ч (АЛ9) as per GOST 1583-93.
3. Unspecified limit deviation of casting dimensions:
   - Upto 100 mm $^{+1.5}_{-1.0}$mm;
   - Above 100 upto 200 mm $^{+2.0}_{-1.5}$mm;
   - Above 200 mm $^{+3.0}_{-2.5}$mm;
   - For radii above 3 upto 10 mm ±1 mm;
   - Above 10 upto 30 mm ±1.5 mm;
   - Above 30 mm $^{+2.0}_{-2.5}$ mm.

   Limit deviation of wall thickness $^{+1.5}_{-1.0}$mm.
4. Unspecified wall thickness 5 mm.
5. Unspecified casting radii 2...5 mm.
6. Casting draft angle 2° above tolerance.
7. Unspecified limit deviations of dimensions for machining : H14; h14 ± $^{IT14}_{2}$
8. In the places of resting base, the dimension "Ц" should be (9.5±0.3) mm.
9. It is permitted to carry out the dimension as "Ц" ($9^{+3.0}_{-1.0}$) mm,except the places of resting base.
10. On the surface P and T around the hole Ø15 mm, marks,dents with diameter exceeding 1 mm is not permitted.Marks and dents with depth not exceeding 0.05 mm,nonintersecting flenging of depth not exceeding 0.1 mm receding from the internal contour by 7 mm minimum is permitted.
11. Reduction of wall thickness in machining places upto 3mm minimum is allowed.
12. Check the inner contour of cover ~~as per template~~ ensure with checked tooling.
13. Check the inner cavity of cover as per dummy.
14. Difference in dimension should be Ø1 mm maximum.
15. Technical requirement for thread as per standard 82021-00.
16. Absence of machining is permitted on surface "C".
17. Test the casting for air-tightness with water under pressure minimum 0.3 MPa (3 Kgf/cm²), for 2 minutes.Leakage of water is not permitted. It is permitted to test for air tightness with air in water under pressure minimum 0.1 MPa(1Kgf/cm²). Leakage of air is not permitted.
18. Mark the grade of material as per GOST 2171-90, letter type 10 -Пр3 GOST.26.008-85.
19. Traces of Tools are allowed on the length "14".
20. *Dimensions are given for reference.
21. *' Dimensions to be ensured by Tool.

PILOT SAMPLE SHOULD BE APPROVED BY A H S P BEFORE MASS PRODUCTION.

IDT. NT. ~~ap~~ 24	DO NOT STAMPED OR MARKED WHERE INDICATED THUS #

ALL SHARP EDGES AND CORNERS TO BE REMOVED UNLESS OTHERWISE STATED MACHINED CORNERS TO HAVE R OUT. USE 3. INCLUDE EQUIVALENT CHAMFERS ARE PERMISSIBLE.

3	06.05.96	Vide Refs No 96-98	
2	10.03.89	NOTE No 1001-No.2, 7-56.	
1A	19.07.88	DECORRECTION.	
ISSUE	DATE	NATURE OF AMENDMENTS	

MDS		MATERIAL:- АЛ9ч/АК7ч GOST 1583-93	DWN DT:- ~~Ch 306-88-8~~ ~~306-94-18~~
CHD			
APPD			
DATE	04/04/94	OPTIMUM LEVEL OF QUALITY ASSURANCE (HEAVY VEHICLES)	
SCALE: 2:2			
DIMENSIONS IN mm			
UNLESS OTHERWISE STATED ±0.25 (0.01)		ALL TOLERANCE PER CONVERSION TTD	TITLE:- **CYLINDER HEAD COVER L.H.**
D.S. CAT NUMBER			DRAWING NUMBER **306-94-21**

DRG. CONVERTED BASED ON RUSSIAN DRGNG. GOST. 2
SUPPLY CODE 1/2/21 1-3
356
SIZE A1x5

306-157

▽4 (▽)

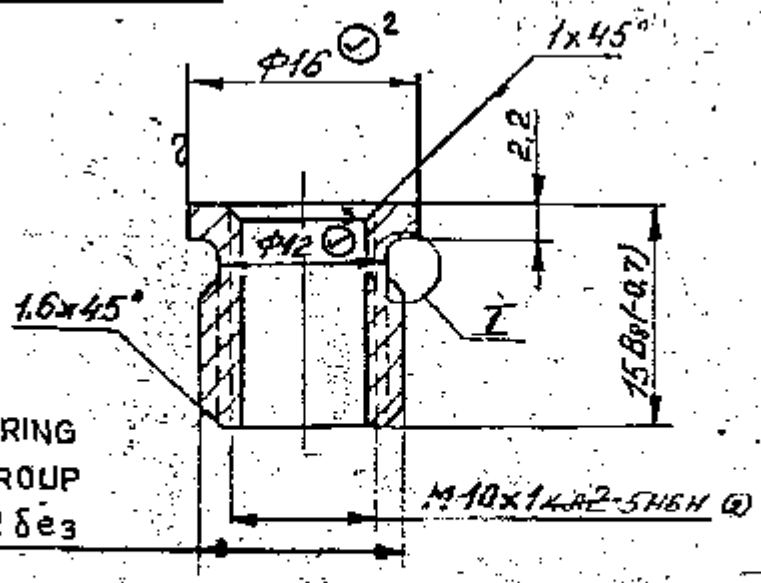

NOT CONSIDERING ✓ ACCURACY GROUP

1 M 14 X1·5 T1 2 δe3

I / M5:1 Scale 5:1

REPAIR SIZE DIMENSIONS ARE ADDED WHERE INDICATED THUS ✓ BASED ON Lt. No. 82847/OH/AAD/ED DT. 13-1-95

S.No	R1	R2	REMARKS
✓ 1	M16x1.5T1 2δ2₃ Φ 15.026 +0.124 +0.062 (MEAN)	M18x1.5T1 2δ2₃ Φ 17.026 +0.124 +0.062 (MEAN)	1. MARK REPAIR SIZE CATEGORY R1, R2. 2. ALL OTHER SIZES SURFACE FINISH, MATERIAL AND TECHNICAL REQUIREMENTS ARE SAME.
✓ 2	Φ18	Φ 20	
✓ 3	Φ 13·8	Φ 15·8	

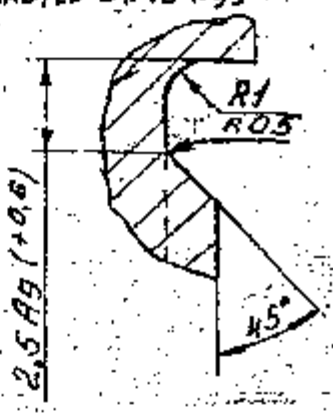

2. TECHNICAL REQUIREMENTS FOR THREAD SHOULD IN ACCORD. WITH STANDARD 82021-00.
3. DIMENSIONS WITH UNSPECIFIED TOLERANCES SHOULD BE MAINTAINED AS PER ACCURACY CLASS 7 OST 1010.
4. SHARP EDGES SHOULD BE BLUNTED.
5. COATING : Zn 3, CHROMATIZING IN ACCORDANCE WITH UA 483-82. (A5)

(A) ALTERNATE MATERIAL : STEEL 080 M40 (EN 8) TO BS : 970 PT-I-1983 OR 45 C8 TO IS : 1570

• PILOT SAMPLE SHOULD BE APPROVED BY A H S P BEFORE BULK PRODUCTION

ISSUE	DATE	NATURE OF AMENDMENTS
A	18 7/09	3rd ALTN. COMM. MIN POINT 8 DT. 27-2-09

DRN: SCALE: 2 : 1

CHD: DIMENSIONS IN mm

TCD: TOLERANCE ON DIMS UNLESS OTHERWISE STATED

APPD:

DATE 28-1-88 ALL THREADS TO CONFORM TO

EST. MASS 0.009 Kg

TO BE STAMPED OR MARKED WHERE INDICATED THUS # (LETTERS)

ALL SHARP EDGES AND CORNERS TO BE REMOVED UNLESS OTHERWISE STATED MACHINED CORNERS TO HAVE R OUTSIDE & R INSIDE EQUIVALENT CHAMFERS ARE PERMISSIBLE

MATERIAL:- 16.560ST7417-75 RD.BAR 45.60ST 1051-73

USED ON:- Cb 306-00-6 Cb 306-09-10

CONTROLLERATE OF QUALITY ASSURANCE(HEAVY VEHICLES) AVADI

TITLE: BUSH

D'S CAT NUMBER

DRAWING NUMBER 306 - 157

DRAWING NUMBER
350 03

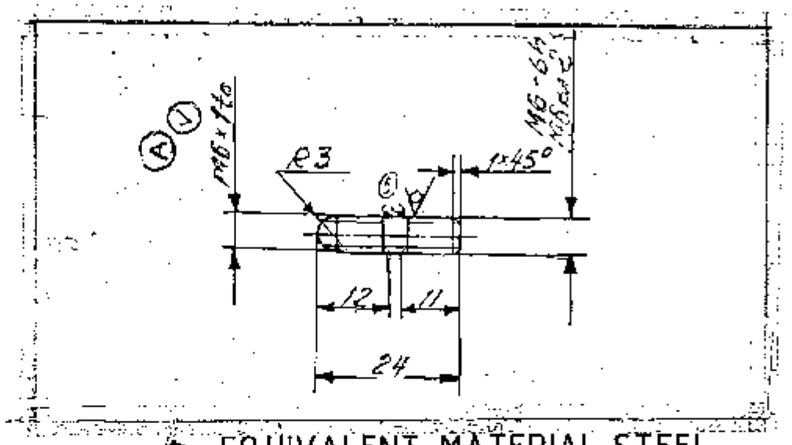

(D) EQUIVALENT MATERIAL STEEL
45C8 TO IS:1570

1. DELETED.
2. TECHNICAL REQUIREMENTS FOR THREADS AS PER STANDARD 82021-00.
3. DIMENSIONS WITH UNSPECIFIED TOLERANCES AND THE REST OF THE TECHNICAL REQUIREMENTS AS PER STANDARD 82052-00.
4. COATING: CADIUM 3, CHROMATIZING AS PER ШЭЛ-104 WITH SUBSEQUENT ELIMINATION OF HYDROGEN EMBRITTLEMENT.
5. THE THREAD MAY BE MADE BY ROLLING WITH DIAMETER OF UNTHREADED PORTION WITH IN THE PITCH DIAMETER OF THREAD.
6. MECHANICAL DAMAGES OF THE CADIUM COATING SUCH AS SCRATCHES, NICKS AND DENTS ARE ALLOWED ON ASSEMBLY UNITS, PROVIDED THE STEEL IS NOT EXPOSED.
7. ALTERNATE MATERIAL: STEEL GRADES 40 & 50 GOST 1050-74.
8. HARDNESS:- 27-32 HRC.

(B)

* ALT MATERIAL:-
STEEL 709 M40 (EN-19) TO
BS:- 970 PT.-1- 1983

PILOT SAMPLE SHOULD BE APPROVED BY A H S P BEFORE BULK PRODUCTION

EXPLANATORY NOTE:

8. REFERENCE MATERIAL QUOTED:
COLD DRAWN SIZED ROUND BAR, 6.0 (-0.025)mm DIA TO GOST 7417-75 FROM HIGH GRADE SIZED STEEL NORMAL SURFACE QUALITY TO GOST 1051-73 AND MANUFACTURED IN ACCORDANCE WITH QUALITY CARBON STRUCTURAL STEEL GRADE 45 TO GOST 1050-74.
REFERENCE NOTE '7' ON ALTERNATE MATERIAL: QUALITY CARBON STRUCTURAL STEEL GRADE 40 AND 50 TO GOST 1050-74.

a) CHEMICAL COMPOSITION: AS PER GOST 1050-74.

GRADE OF STEEL	CONTENT OF ELEMENTS %						REMARKS
	C	Si	Mg	Cr	S	P	
				MAXIMUM			
45	0.42 - 0.50	0.17 - 0.37	0.50 - 0.80	0.25	0.040	0.035	Ref,Matl
40	0.37 - 0.45	0.17 - 0.37	0.50 - 0.80	0.25	0.040	0.035	Alt,Matl
50	0.47 - 0.55	0.17 - 0.37	0.50 - 0.80	0.25	0.040	0.035	Alt,Matl

RESIDUAL CONTENT OF COPPER AND NICKEL SHOULD NOT EXCEED 0.25% EACH

b) MECHANICAL PROPERTIES: AS PER GOST 1050-74.

GRADE OF STEEL	ULTIMATE TENSILE STRENGTH Kgf/mm²	YIELD POINT Kgf/mm²	ELONGATION %	REDUCTION IN AREA %	IMPACT STRENGTH Kgfm/cm²	HARDNESS BHN MAX	REMARKS
45	61	36	16	40	5	207	Ref,Matl
40	58	34	19	45	6	197	Alt,Matl
50	64	38	14	40	4	217	Alt,Matl

(A) 9. REPAIR SIZE DIMENSIONS ARE ADDED WHERE INDICATED THUS ⊘ BASED ON OVERHAUL SPECIFICATIONS PART III REPAIR DRAWINGS.

Sl.No.	R	REMARKS
1	M8 x 1.25 to	ALL OTHER CONDITIONS AS PER STD. DRG.
2	PCD = 7.188 +0.152 +0.082	

** Cb 306-08-8, Cb 306-09-10, Cb 401-03-6, Cb 3301-15-30, Cb 306-08-13, Cb 306-09-13, Cb 3308-04-24

COMMON TO V-92S2 ENGINE

(A-11)
SIZE A3

EST WT 0.004 Kg

TO BE STAMPED OR MARKED WHERE INDICATED THUS # (LETTERS)

ALL SHARP EDGES AND CORNERS TO BE REMOVED UNLESS OTHERWISE STATED MACHINED CORNERS TO HAVE R OUTSIDE R INSIDE EQUIVALENT CHAMFERS ARE PERMISSIBLE

ISSUE	DATE	NATURE OF AMENDMENTS
D	12-8-10	4th Alt. Comm. Meeting Minutes Point No.11 Dt: 26-10-09
C	25.8.08	USED ON NUMBERS ADDED AUTHY:- MIN. OF ALT. COM. MEET.
B	11.01.08	POINT No.-2.12 Dt.- 07-02-07
A	6.9.95	REPAIR SIZE DIMENSION ADDED

DRN
CHD
TCD
APPD
DATE 30-5-86
SCALE 1 : 1
DIMENSIONS IN mm
TOLERANCE ON DIMNS UNLESS OTHERWISE STATED
ALL THREADS TO CONFORM TO

MATERIAL: ROUND BAR GOST 7417-75 *
45 GOST 1051-73

USED ON ** (C) Cb 3301-15-44, Cb 3338-402-4, Cb 3329-01-11

CONTROLLERATE OF INSPECTION (HEAVY VEHICLES) AVADI

TITLE: STUD M6 x 24

D S CAT NUMBER

DRAWING NUMBER 350 03

DRAWING NUMBER 406-93-15 | SHEET No. 1 Of 1

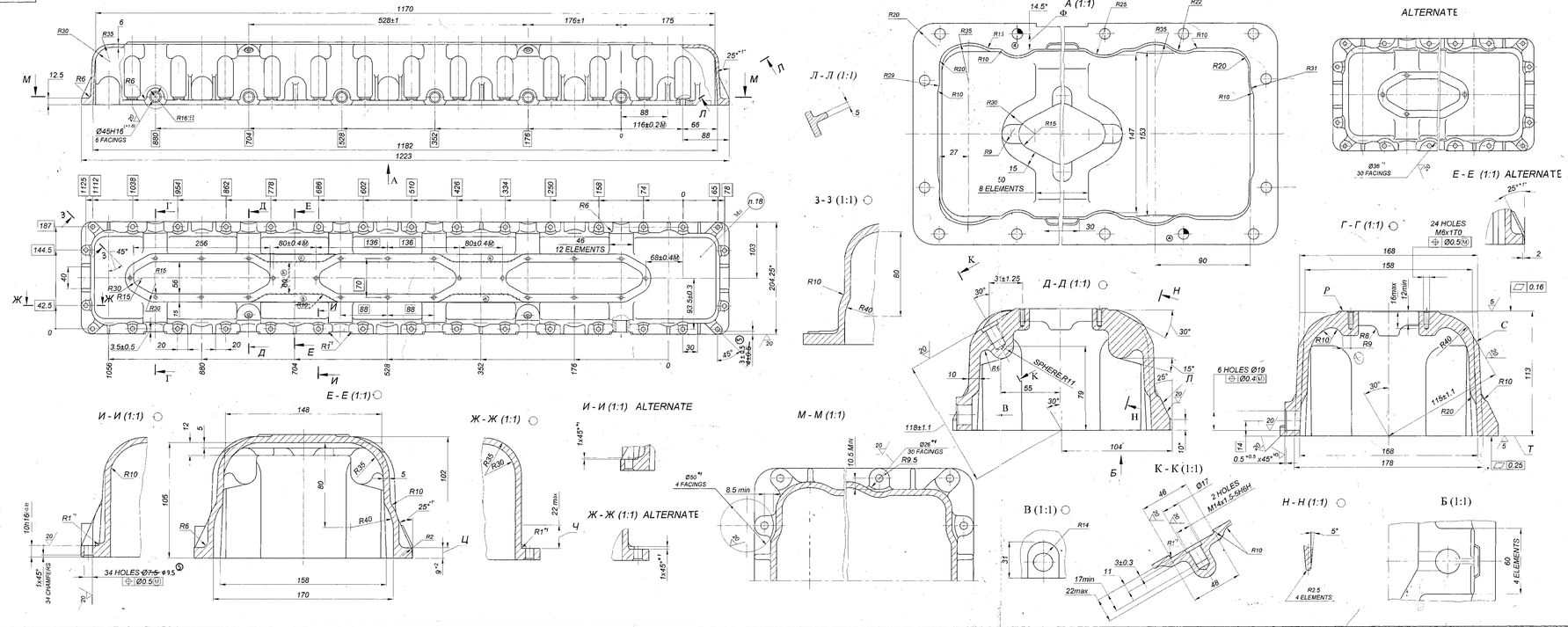

1. Requirement for casting should be as per TTM-27-67.
2. Alternate material АК7ч (АЛ9) as per GOST 1583-93.
3. Unspecified limit deviation of casting dimensions:
   - Upto 100 mm $^{+1.5}_{-1.0}$ mm;
   - Above 100 upto 200 mm $^{+2.0}_{-1.0}$ mm;
   - Above 200 mm $^{+2.5}_{-2.0}$ mm;
   - For radii above 3 upto 10 mm ±1 mm;
   - Above 10 upto 30 mm ±1.5 mm;
   - Above 30 mm $^{+2.0}_{-1.0}$ mm.

   Limit deviations of wall thickness $^{+1.5}_{-1.0}$ mm.
4. Unspecified wall thickness 5 mm.
5. Unspecified casting radii 2...5 mm.
6. Casting draft angle 2° above tolerance.
7. Unspecified limit deviations of dimensions for machining : H14; h14 $^{+0.4}_{-0.4}$
8. In the places of resting base, the dimension "Ц" should be (9.5±0.3) mm.
9. It is permitted to carry out the dimension as "Ц" (9$^{+0.5}_{-0.5}$) mm,except the places of resting base.
10. On the surface F and T around the hole Ø15 mm, marks,dents with diameter exceeding 1 mm is not permitted.Marks and dents with depth not exceeding 0.05 mm, nonintersecting flanging of depth not exceeding 0.1 mm-receding from the internal contour by 7 mm minimum is permitted.
11. Reduction of wall thickness in machining places upto 3mm minimum is allowed.
12. Check the inner contour of cover ~~as per template~~ ensure with checked tooling.
13. Check the inner cavity of cover as per dummy.
14. Difference in dimension should be Ø1 mm maximum.
15. Technical requirement for thread as per standard 82021-00
16. Absence of machining is permitted on surface 'C'.
17. Test the casting for air-tightness with water under pressure minimum 0.3 MPa (3 Kgf/cm ^{2}), for 2 minutes.Leakage of water is not permitted. It is permitted to test for air tightness with air in water under pressure minimum 0.1MPa (1 Kgf/cm ^{2}) Leakage of air is not permitted.
18. Mark the grade of material as per GOST 2171-90, letter type 10 -Пр3 GOST:26.008-85
19. Traces of Tools are allowed on the length "Ч".
20. *Dimensions are given for reference.
21. "Dimensions to be ensured by Tool.
22. Projection of surfaces П over the plane of rib should not exceed 1 mm for the maximum linear dimensions of cover.

PILOT SAMPLE SHOULD BE APPROVED BY A B S P BEFORE MASS PRODUCTION.

EO Nº: ОЦ TO BE STAMPED ON MARKED WHERE INDICATED THUS # !

ALL SHARP EDGES AND CORNERS DO NOT REMOVED UNLESS OTHERWISE STATED MACHINED CORNERS TO HAVE R - 0ST. NOR R INSIDE EQUIVALENT CHAMFER ARE PERMISSIBLE.

2	16.07.01	УДа №474 от 06-09		
1	12.03.99	МОТК №2003-363 Г-566		
0	20.07.97	ОСВОЕНИЕ		
INDEX	DATE	NATURE OF AMENDMENTS		

DES: Ф.Ф.Ф. MATERIAL: АК9ч(АЛ4) GOST 1583-93
CHD: Ф.Ф.Ф. GOST
APPD: Ф.Ф.Ф.
DATE: 01.07.97
SCALE: 1:1
SHEET SIZE: A1
TOLERANCE ON SIZES UNLESS OTHERWISE STATED IS: IT14 (±)
ALL THREADS TO CONFORM TO
DEPARTMENT OF QUALITY ASSURANCE (HEAVY VEHICLES) AVADI

USED ON: Ф 304-08-3 ~~406-93-2~~

TITLE: CYLINDER HEAD COVER RH

B S CAT NUMBER

DRAWING NUMBER 406-93-15

DWG. REPRINTED BASED ON RUSSIAN ORIGINAL ISSUE - 1
DRAWING ISSUED BY ITD 18 Mar Mon 1, No. 1-3

SIZE A2x5

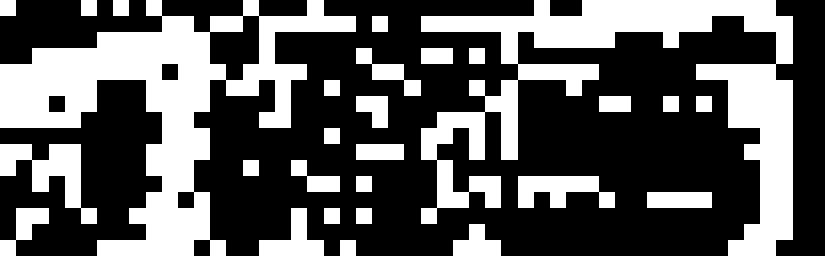

DRAWING NUMBER
406-93-18

SHEET No. 1 OF 1

1.Remaining Graph, Dimensions,Surface finish, Technical requirements should be as per Drawing 406-93-15

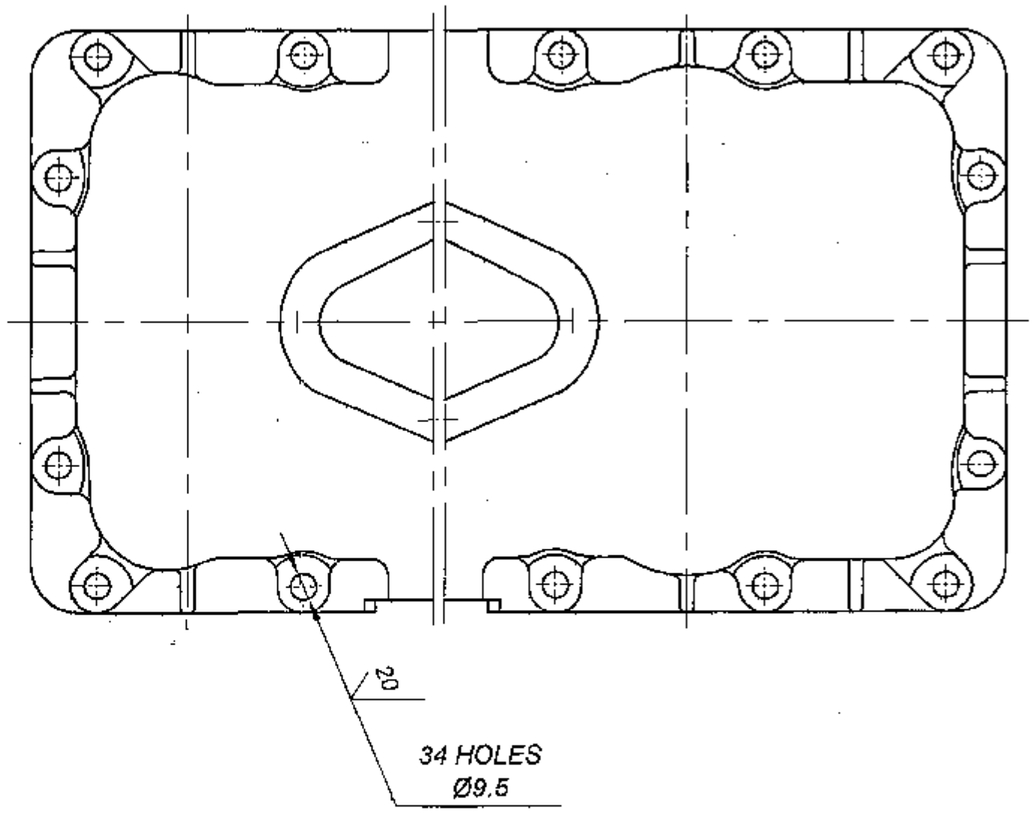

Cylinder

DRG. INDIANISED BASED ON RUSSIAN ORIGINAL ISSUE - 1

PILOT SAMPLE SHOULD BE APPROVED BY A H S P BEFORE BULK PRODUCTION.

EST. WT. (Kg) 9.6

TO BE STAMPED OR MARKED WHERE INDICATED THUS # (LETTERS)

ALL SHARP EDGES AND CORNERS TO BE REMOVED UNLESS OTHERWISE STATED MACHINED CORNERS TO HAVE R OUT-SIDE R INSIDE EQUIVALENT CHAMFERS ARE PERMISSIBLE.

ISSUE	DATE	NATURE OF AMENDMENTS
1A	09.07.08	DO.CORRECTION.

DRN		MATERIAL :- AK9ч(АЛ4) GOST 1583-93	USED ON :- СБ 306-08-13
CHD			
APPD		CONTROLLERATE OF QUALITY ASSURANCE (HEAVY VEHICLES) AVADI	
DATE	05/2/09		
SCALE:- 1:2			
DIMENSIONS IN mm		TITLE :- CYLINDER HEAD COVER - RH (1A)	
TOLERANCE ON DIMNS UNLESS OTHERWISE STATED IS : 2102 - 69			
ALL THREADS TO CONFORM TO		D S CAT NUMBER	DRAWING NUMBER 406-93-18

F-3 101/166

SIZE A3

DRAWING NUMBER
Cb.306-08-13

SHEET No. 1 OF 1

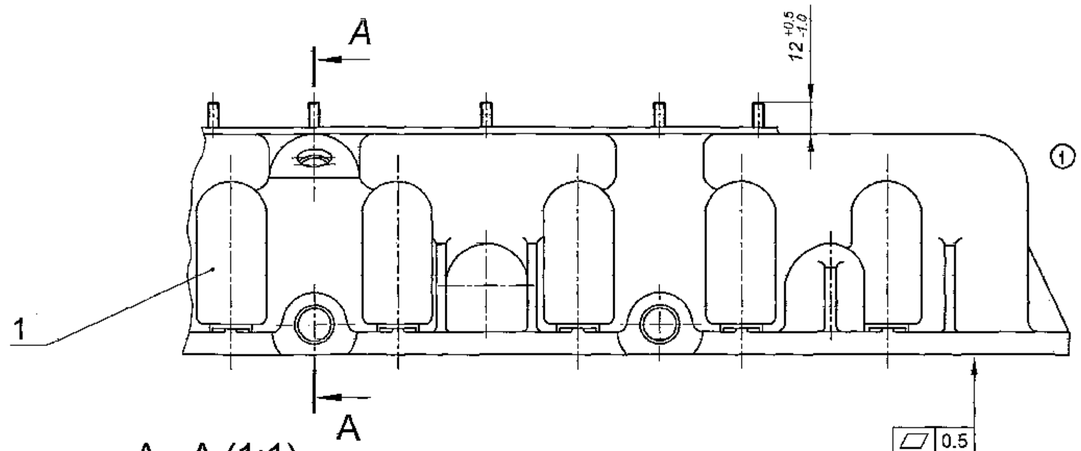

A - A (1:1)

1. SET THE BUSH ITEM 2 ON SEALING COMPOUND ANAEROBIC ANATERM-5M,ДТУ 2257-339-00208947-2000 AS PER ИЛ-652-86.

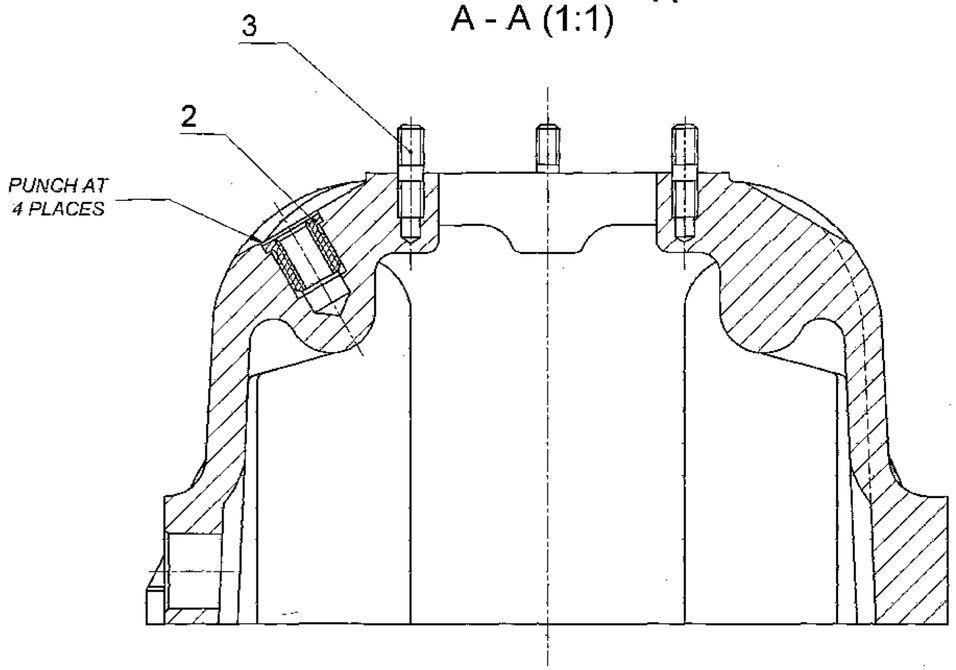

DRG. INDIANISED BASED ON RUSSIAN ORIGINAL ISSUE - NIL

PILOT SAMPLE SHOULD BE APPROVED BY A H S P BEFORE BULK PRODUCTION.

EST. WT.	TO BE STAMPED OR MARKED WHERE INDICATED THUS # (LETTERS)
9.7	

ALL SHARP EDGES AND CORNERS TO BE REMOVED UNLESS OTHERWISE STATED MACHINED CORNERS TO HAVE R OUT-SIDE R INSIDE EQUIVALENT CHAMFERS ARE PERMISSIBLE.

ISSUE	DATE	NATURE OF AMENDMENTS
1	7.2.09	NOTN. No 05-07, (F 158)
A	09.07.08	DO.CORRECTION.

DRN
CHD
APPD
DATE 02/2/17
SCALE:- 1:2
DIMENSIONS IN mm
TOLERANCE ON DIMNS UNLESS OTHERWISE STATED IS : 2102 - 69

ALL THREADS TO CONFORM TO

MATERIAL :- ——

USED ON :- C5406-12-75

CONTROLLERATE OF QUALITY ASSURANCE (HEAVY VEHICLES) AVADI

TITLE :- **CYLINDER HEAD COVER RH ASSY** (A)

D S CAT NUMBER

DRAWING NUMBER **Cb.306-08-13**

F-3 / 69 / 165

SIZE A2

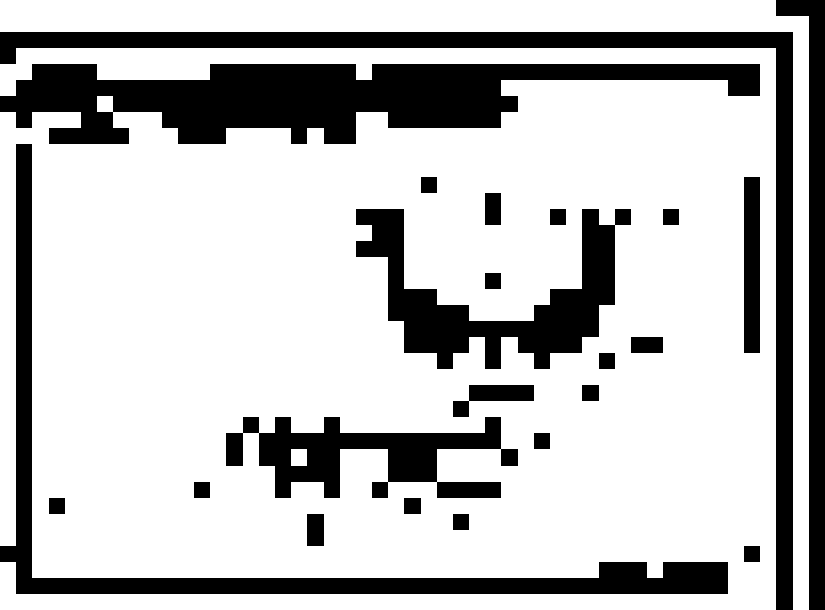

USED ON	ITEM No.	DRAWING NUMBER	D S CAT NUMBER	DESCRIPTION	QTY	REMARKS
		Cb.306-08-13		CYLINDER HEAD COVER		
Cb.406-12-75		ITEM LIST		RH ASSY		
	1	406-93-18		CYLINDER HEAD COVER RH	1	
	2	306-157		BUSH	2	
	3	350-03		STUD M6x24	24	

I/L CREATED BASED ON RUSSIAN ORIGINAL ISSUE – NIL

ISSUE	DATE	NATURE OF AMENDMENTS	ISSUE	DATE	NATURE OF AMENDMENTS

F - 3
68/166

DRN		CONTROLLERATE OF QUALITY ASSURANCE (HEAVY VEHICLES) AVADI.		
CHD		TITLE : **CYLINDER HEAD COVER RH ASSY**		
APPD				
DATE	18.5.07	SHT. NO. 1 OF 1	D S CAT NUMBER	ITEM LIST FOR **Cb.306-08-13**

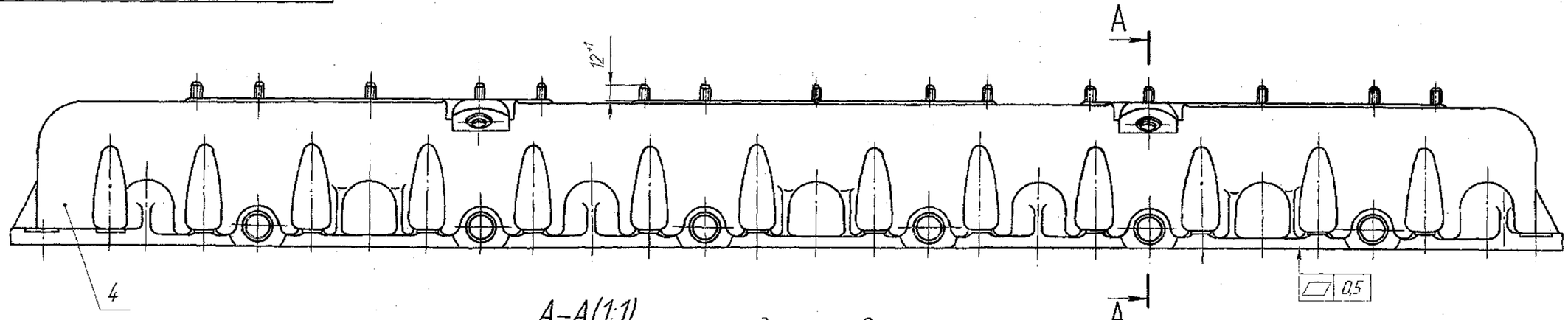

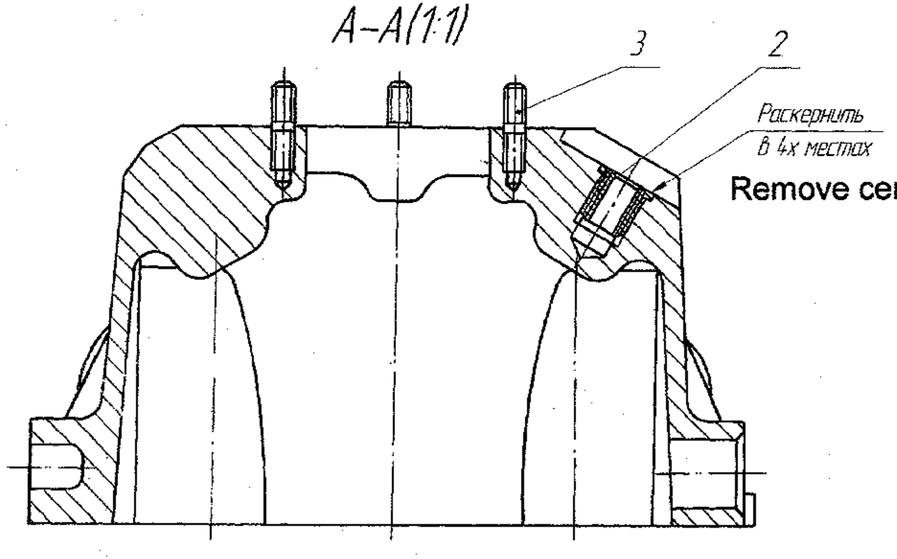

Remove center punch at 4 places

1. Установить втулку поз.2 на герметик анаэробный Анатерм-5МД ТУ 2257-339-00208947-2000 по ИЛ-652-86.

1. SET THE BUSH ITEM No. 2 ON SEALING COMPOUND ANAEROBIC ANATERM ТУ 2257-339-00208947-2000 по ИЛ-652-86.

					сб.306-09-8СБ		
Изм.	Лист	№ докум.	Подп.	Дата	Крышка головки левая	Лит.	Масса	Масштаб
Разраб.		196-09					9,7	1:2
Пров.					Сборочный чертеж	Лист	Листов 1
Т.контр.					R.H HEAD COVER		
Н.контр.					Assembly Drawing		
Утв.							

Копировал

Формат А4х4

Инв. № подл. | Подп. и дата | Взам. инв. № | Инв. № дубл. | Подп. и дата

сб.306-09-8СБ

Формат	Зона	Поз.	Обозначение	Наименование	Кол.	Примечание
				Documentation		
				Документация		
*)			сб.306-09-8СБ	Сборочный чертеж		*)A4×4
				Assembly Drawing		
				Детали		
				Parts		
A4		2	306-157 Bush	Втулка	2	
A4		3	350-03 Stud M6X24	Шпилька M6×24	24	
*)		4	306-94-21 L.H. Head Cover	Крышка головки левая	1	*)A2×4

Изм.	Лист	№ докум.	Подп.	Дата
		196-09		
Разраб.				
Пров.				
Н.контр.				
Утв.				

R.H. HEAD COVER сб.306-09-8

Крышка головки левая

Лит.	Лист	Листов
		1

Подп. и дата

Инв. № дубл.

Взам. инв. №

Подп. и дата

Инв. № подл.

Копировал

Формат A4