DRG. NO–

PROVISIONAL

ALL DIMNS. ARE IN MM.
UNTOL. DIMNS. ARE AS PER IS:2102 (MEDIUM CLASS).

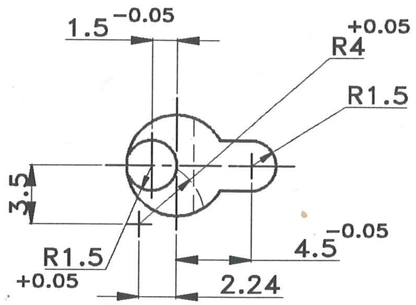

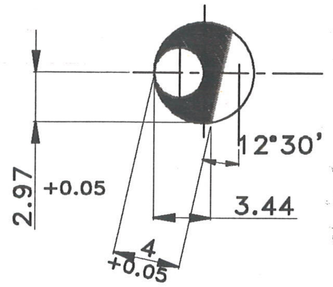

SECTION P–P

MATERIAL– BS 970, PT–1. 1983
GRADE 708 M40 OR 709 M40

PROTECTIVE FINISH – ANTIRUST FINISH
TO SPECN. WPN/GEN/3·CLASS II & OIL DEEPING.

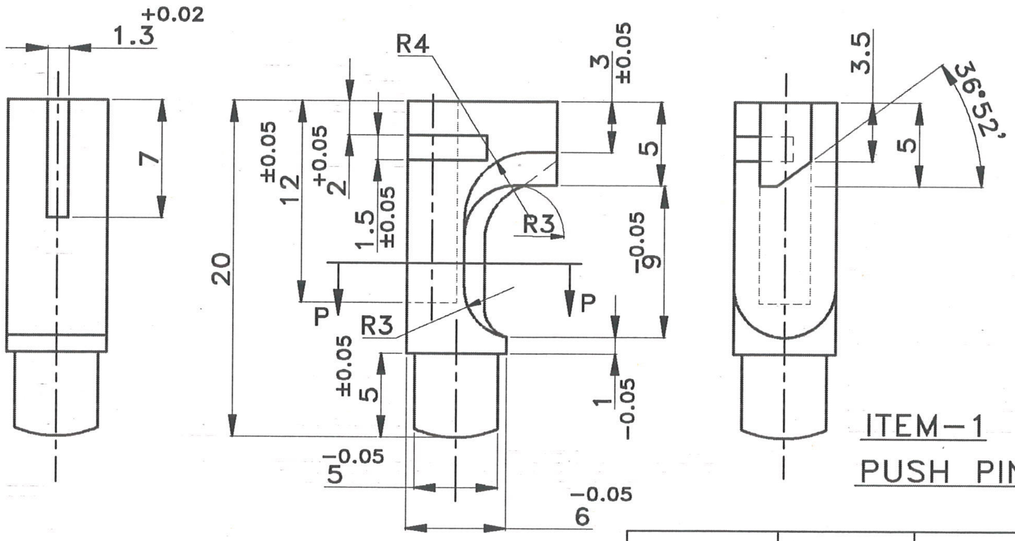

ITEM–1
PUSH PIN ▽▽(▽▽▽)

CTM-0111/3	SURFACE TREATMENT OPERATION VIZ: BLACK CHROMIUM PLATING THICKNESS OF DEPOSITION 5 TO 7 MICRON ON COMP.
CTM-0111/2	SURFACE TREATMENT OPERATION viz. ELECTROLESS NICKEL PLATING WITH BLACK REFLECTIVE DEPOSIT PH 7 TO 7.5 , THICKNESS 8 TO 12 MICRON
CTM-0111/1	SURFACE TREATMENT OPERATION viz. NICKEL PLATING WITH COPPER UNDERCOAT WITH SPECN BS:1224 1970 FOLLOWED BY LACQUERING WITH BALCKISH TIN JOB PALLADIUM BLACK NICKEL PH 5.2 TO 5.6 THICKNESS OF 5 TO 6 MICRON
DRG NO–	PROTECTIVE FINISH

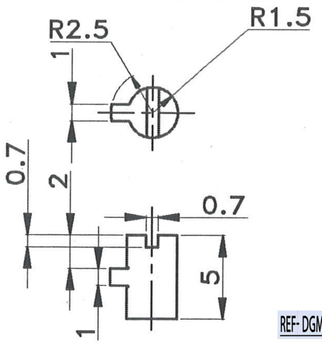

ITEM–2
LOCK PIN

REF- DGM/ PLNG & MKTNG LETTER NO- - 107/PISTOL DEVELOPMENT/DGM/16-17, DT- 07/03/2017

APPROVED BY : DGM ORD/PLNG

ITEM NO.	NO.OFF	MATERIAL	DESCRIPTION	REMARKS
2.	1	AS STATED	LOCK PIN	
1.	1	AS STATED	PUSH PIN	

DT.&SG.	DESCRIP	SCHEDULE NO :	COMPT– MIDIFIED RECEIVER	STORE DRG. No.
		SCALE = / PROJECTION : THIRD ANGLE		
		DRAWN BY : SB 02/03/17	PUSH PIN & LOCK PIN FOR EJECTION OF MAGAZINE OF 0.32" MODIFIED PISTOL	
		TRACED BY :		
		CHECKED BY :	DRG. NO. :– CTM–0111/1 TO CTM–0111/6	
		APPROVED BY : 02/03/17		
		CONCURRED BY: JWM/Con-C	M / C :	NO. OF SHTS. : 1
AMENDMENTS		DATE: 02/03/17 SIGN.: 2/3/17	G. & S. FY. COSSIPORE	SHT. NO. : 1.