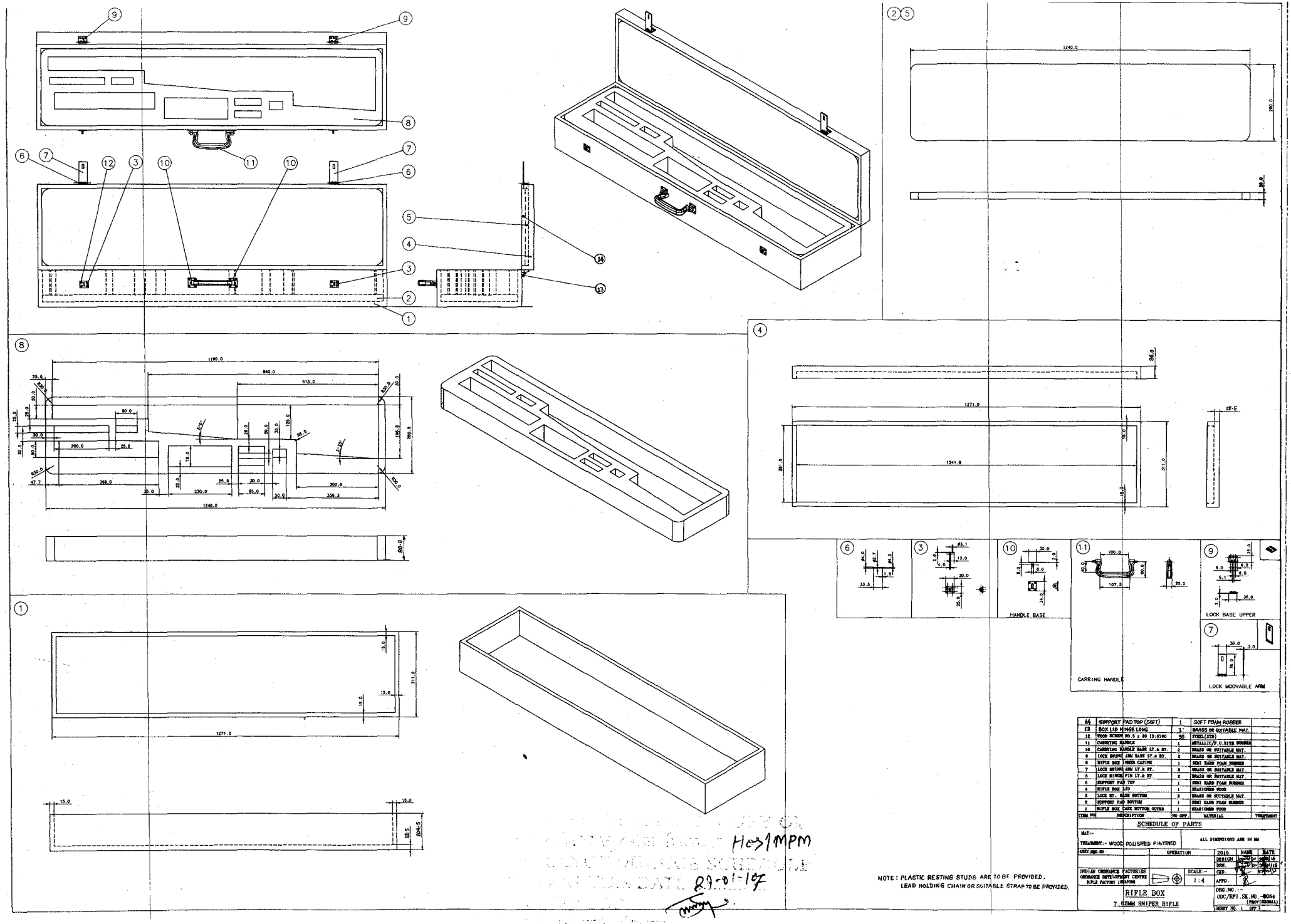

ITEM NO	DESCRIPTION	NO OFF	MATERIAL	TREATMENT
14	SUPPORT PAD TOP (SOFT)	1	SOFT FOAM RUBBER	
13	BOX LID HINGE LONG	2	BRASS OR SUITABLE MAT.	
12	WOOD SCREW NO.5 x 20 IS:6760	50	STEEL(ZTS)	
11	CARRYING HANDLE	1	METALLIC/P.U.WITH RUBBER	
10	CARRYING HANDLE BASE LT.& RT.	2	BRASS OR SUITABLE MAT.	
9	LOCK SWING ARM BASE LT.& RT.	2	BRASS OR SUITABLE MAT.	
8	RIFLE BOX INNER CASING	1	SEMI HARD FOAM RUBBER	
7	LOCK SWING ARM LT.& RT.	2	BRASS OR SUITABLE MAT.	
6	LOCK HINGE PIN LT.& RT.	2	BRASS OR SUITABLE MAT.	
5	SUPPORT PAD TOP	1	SEMI HARD FOAM RUBBER	
4	RIFLE BOX LID	1	SEASONED WOOD	
3	LOCK RT. BASE BOTTOM	2	BRASS OR SUITABLE MAT.	
2	SUPPORT PAD BOTTOM	1	SEMI HARD FOAM RUBBER	
1	RIFLE BOX CASE BOTTOM OUTER	1	SEASONED WOOD	

SCHEDULE OF PARTS

MAT:-

TREATMENT:- WOOD POLISHED FINISHED

ALL DIMENSIONS ARE IN MM

ASSY. DRG. NO | OPERATION

2015 | NAME | DATE

DESIGN | DRN. | CHD. | APPD.

INDIAN ORDNANCE FACTORIES
ORDNANCE DEVELOPMENT CENTRE
RIFLE FACTORY JABALPUR

SCALE:- 1:4

RIFLE BOX

7.62MM SNIPER RIFLE

DRG.NO.:-
ODC/RFI.SX.NO.-0054
(PROVISIONAL)

SHEET NO. 1 OF 1

NOTE: PLASTIC RESTING STUDS ARE TO BE PROVIDED.
LEAD HOLDING CHAIN OR SUITABLE STRAP TO BE PROVIDED.

Hc31MPM

89-01-10