765-78-836

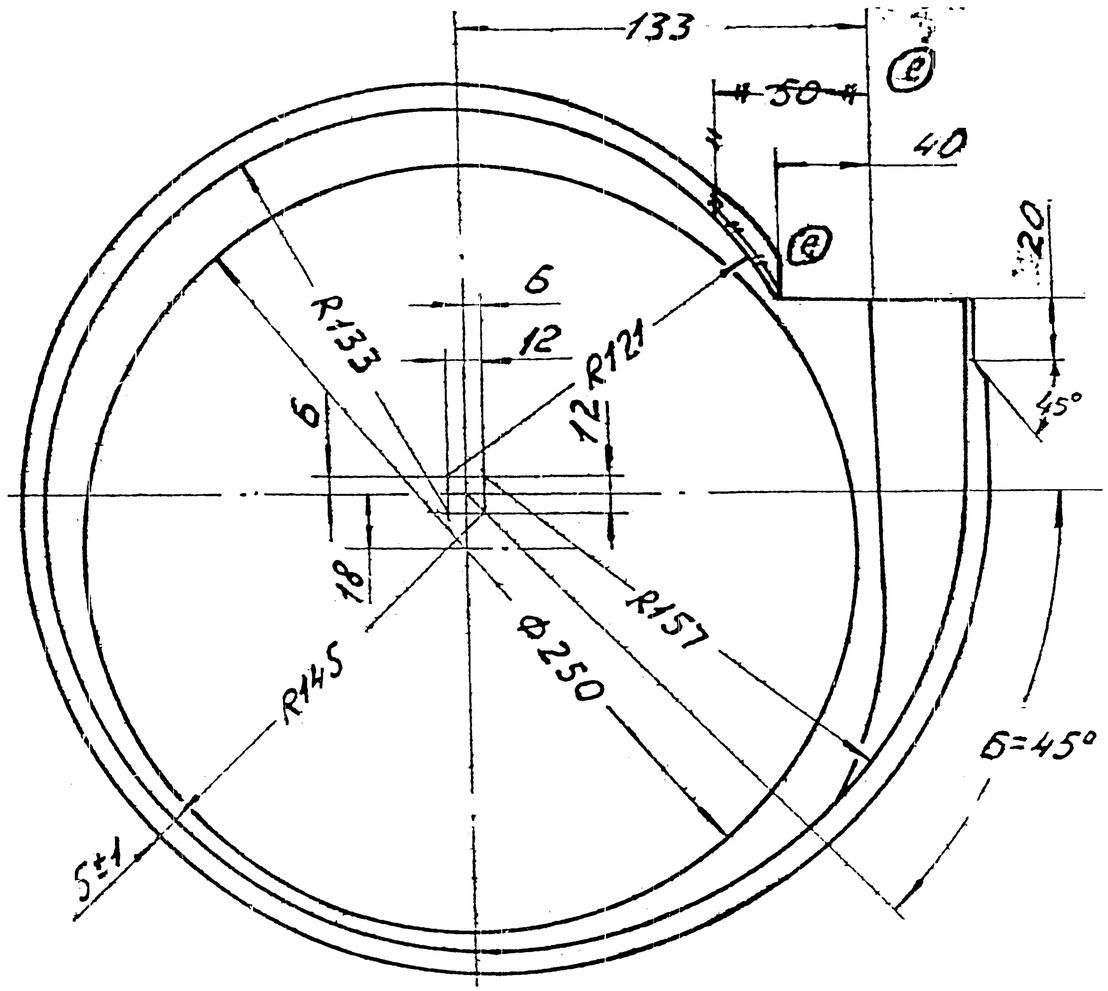

1) Blunt sharp edges

2) Provide dimensions without deviasions with an accuracy 0f±0 5 for dimensions up to 80 and ±1 for dimensions Over 80

3) Non-flatness of surface A should not exceed 0 6mm within the part dimensions

4) provide a gradual change from B to dimension Г on section Б at the angle of bending

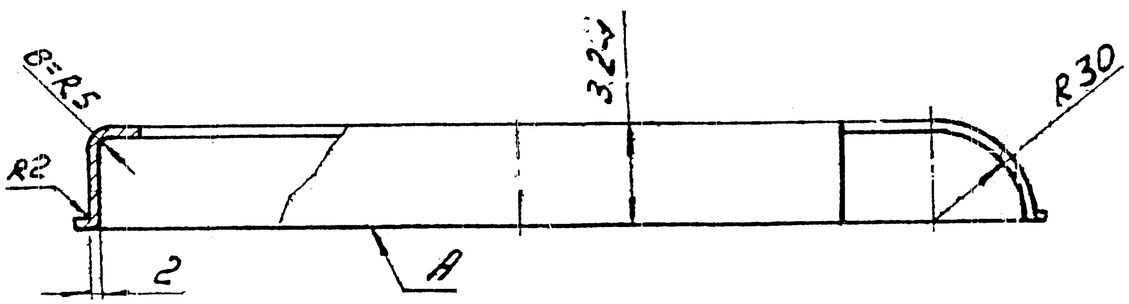

SHEET A 4 1M-2, GOST 21631-76			
ORGL MATERIAL	DC(I)No DATE	ISSUE	AMENDMENTS
ALL SHARP EDGES & CORNERS TO BE ROUNDED OFF.	ALL THREADS TO CONFORM TO SPECIFICATION.		STAMP OR ETCH, PART NO. MANUFACTURER'S NAME & YEAR OF MFR.
DRG. NOT TO BE SCALED			
SCALE:- 1:2	TOLERANCE ON DIMENSIONS UNLESS OTHERWISE SPECIFIED		USED ON:-
DATE :- 20-06-95			
DRN. spredby	WT (Kg)	SCROLL HALF	
TCD.	0.185		
CHD.		765-78-836	
APD.			

CONTROLLERATE OF QUALITY ASSURANCE
(INFANTRY COMBAT VEHICLES)

3 2 1