DRG.NO. SK-5817

GEN. TOL. FINE/MEDIUM/COARSE
CLASS TO IS : 2102

DRG.CONVENTION CONFIRM TO INDIAN STD.
DIMN. IN mm UNLESS OTHERWISE STATED.

CONTROLLED

(PROVISIONAL)

(IF REQUIRED, REFER 3D MODEL)

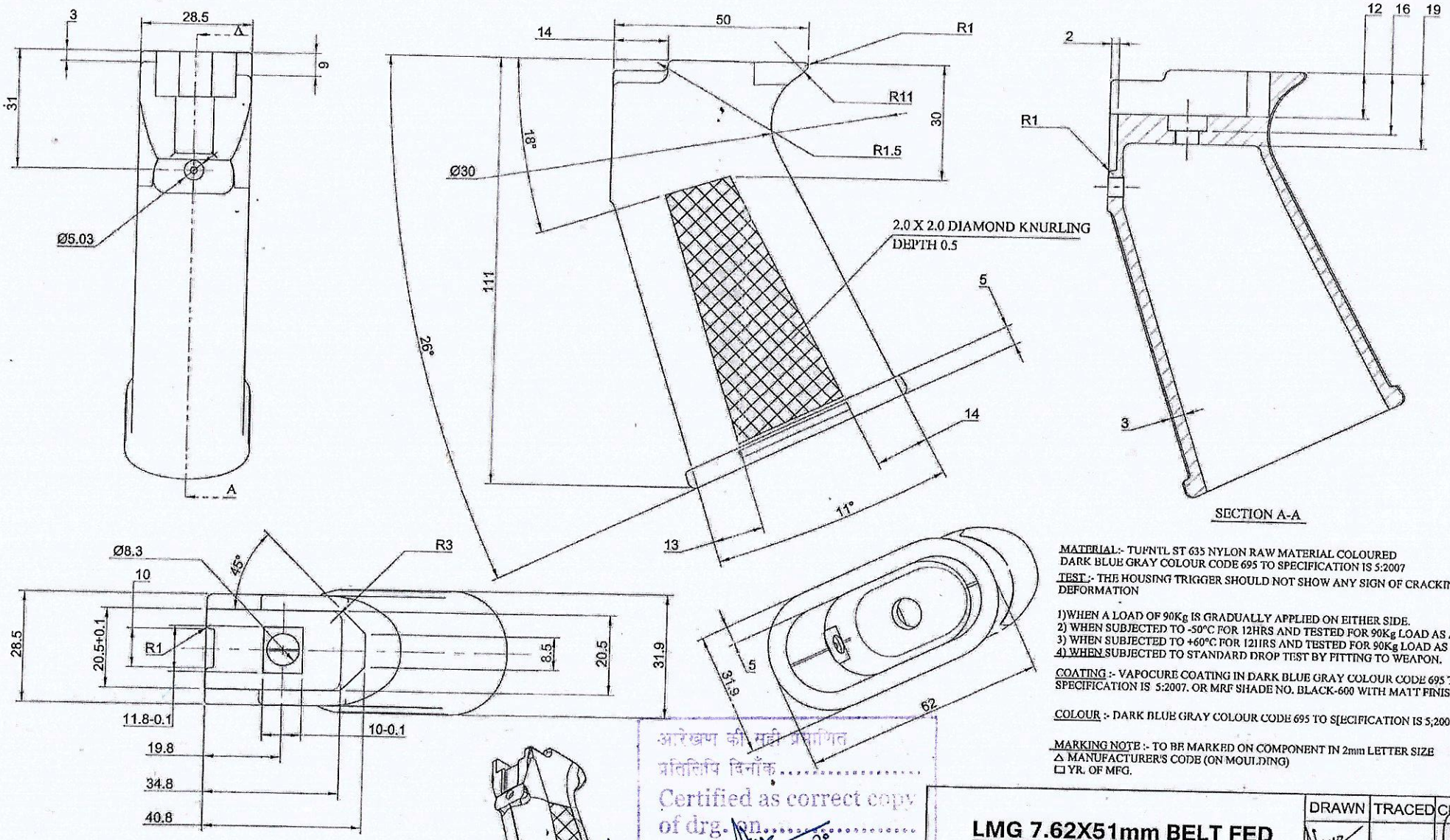

MATERIAL:- TUFNTL ST 635 NYLON RAW MATERIAL COLOURED DARK BLUE GRAY COLOUR CODE 695 TO SPECIFICATION IS 5:2007

TEST :- THE HOUSING TRIGGER SHOULD NOT SHOW ANY SIGN OF CRACKING DEFORMATION

1)WHEN A LOAD OF 90Kg IS GRADUALLY APPLIED ON EITHER SIDE.
2) WHEN SUBJECTED TO -50°C FOR 12HRS AND TESTED FOR 90Kg LOAD AS ABOVE.
3) WHEN SUBJECTED TO +60°C FOR 12HRS AND TESTED FOR 90Kg LOAD AS ABOVE.
4) WHEN SUBJECTED TO STANDARD DROP TEST BY FITTING TO WEAPON.

COATING :- VAPOCURE COATING IN DARK BLUE GRAY COLOUR CODE 695 TO SPECIFICATION IS 5:2007. OR MRF SHADE NO. BLACK-600 WITH MATT FINISH.

COLOUR :- DARK BLUE GRAY COLOUR CODE 695 TO SPECIFICATION IS 5:2007

MARKING NOTE :- TO BE MARKED ON COMPONENT IN 2mm LETTER SIZE
△ MANUFACTURER'S CODE (ON MOULDING)
□ YR. OF MFG.

ALL DIMENSIONS ARE IN mm.
IMPORTANT DIMNS ARE MARKED THUS⊕ (±0.003)
INFORMATION MARKED THUS † TO BE MARKED ON
SURFACE MARKED 'G' TO BE GROUND

आरेखण की सही प्रमाणित प्रतिलिपि दिनाँक.....
Certified as correct copy of drg. on.....
07/02/2020
क. कार्यालय अधीक्षक
Jr. Works Manager
S.A.F.

LMG 7.62X51mm BELT FED HOUSING TRIGGER	DRAWN	TRACED	CHKD.
	DATE	20-07-2018	
	APPROVED	WM/DDO	
SCALE 1:1	**SMALL ARMS FACTORY KANPUR**	DRG.NO.	SK-5817