DS.CAT. NO. 1005-000426

DIMNS. ARE IN mm.

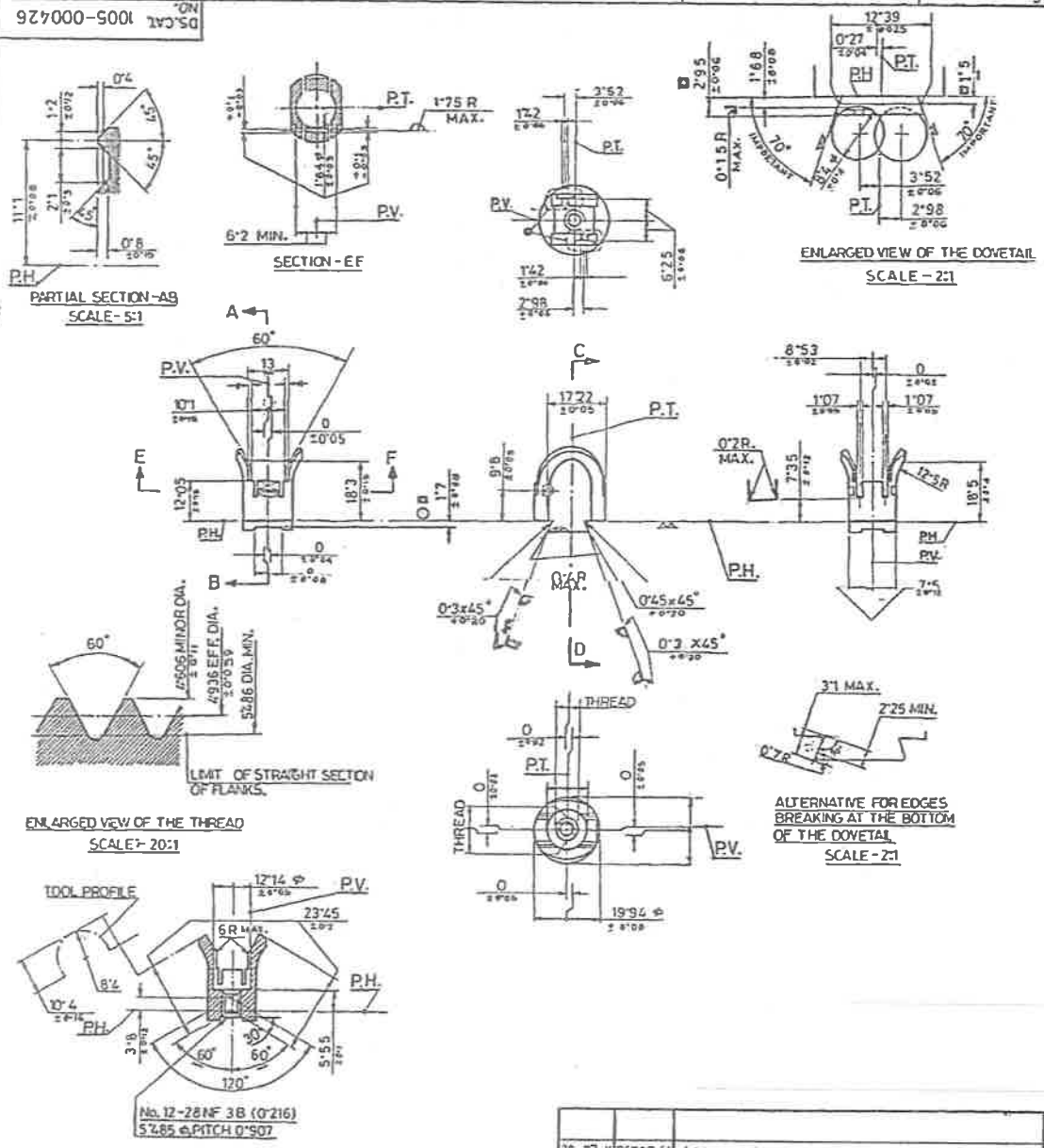

MARKING (SUITABLY) ON SAMPLE :-
MANUFACTURER'S CODE
D.S. CAT. NO.

PROTECTIVE FINISH :- PHOSPHATE TO SPECN. JSS 0465-01:1994 CLASS II (ACCELERATED), OIL FINISH.

ALLOWED DEVIATION FOR :- P.T. ±0·04, P.V. ±0·04, P.H. ±0·04

MATERIAL :- BS 970 PT. 1:1963 Gr. 708 M-40 OR 709 M-40.

MATL :- FOR INVESTMENT CASTING :-
TYPE CLA 5, GR. 'B' OF BS 3146
PT. 1:74. HARDNESS 50-54 HRC.

ABBREVIATION :-
P.V. = PLANE OF VERTICAL
P.H. = PLANE OF HORIZONTAL
P.T. = PLANE OF TRANSVERSE

□ SYMBOL MEANS THAT SAID DIMENSIONS MUST COMPULSORILY HAVE THE INDICATED DATUM AND THAT THE P.V., P.H. ON P.T. MAY NOT BE DATUM.

○ SYMBOL INDICATES THE DIMENSIONS OF LOCATING SURFACE WHICH ARE SITUATED ON THE SAME LEVEL, BUT WHICH ARE MACHINED WITH MORE THAN ONE OPERATION.

SURFACE FINISH :-
AS PER IS: 3073-1967, WHERE NOT SPECIFIED SHOULD BE 'V'

20-07-11	26593-SA	ASSY. No-1055-000838 WAS 1005-000423			
16-11-02	25576-SA	PROFORMA CHANGED, PROTECTIVE FINISH AMENDED, SURFACE FINISH SYMBOL AMENDED & SPECN. ADDED, SYMBOL NOTE ADDED, NEG. RE-TRACED AND DRG. RE-SEALED.	C.D.	DAC	
		PREVIOUS D.C. NOS. 15405-SA, 16102-SA, 16585-SA, 19851-SA, 19923-SA, 20851-SA, 21117-SA, 21672-SA, 22121-SA, 23739-SA AND 25292-SA	COPY	COPY	
DATE	AUTHR.	BRIEF RECORD	ZONE	1 (100)	GD.
SEALED :- D.C. No. 25292-SA, DT. 14.03.2002				SIGN.	

NOMENCLATURE :- FORESIGHT HOUSING

DRN | CHD | TRD | COMP

SCALE :- 1:1, 2:1, 5:1, 20:1,

EST. MASS

APPROVED. DT. 06-11-02. I/C. D.O.

NEG. RE TRACED

MATERIAL :-

H.T. / HARDNESS :- QUENCHED AND TEMPERED 50-54 HRC

PROTECTIVE FINISH :-

AHSP. CQA(SA), CHAPUR

ASSY. D.S. CAT. No. 1055-000838

DGNRS REF.

PART NO. 1002 A

DRG. NO. A 1202

D.S. CAT. NO. 1005-000426

Create PDF files without this message by purchasing novaPDF printer (http://www.novapdf.com)