АЦ8.684.378

АЦ3.895.053

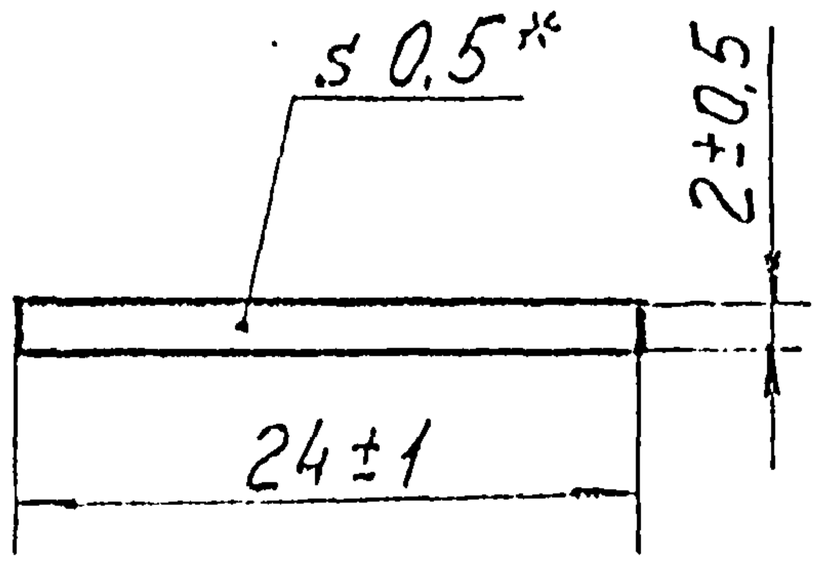

(a) ALT. EQVT. MATL - JSS 5970-11 2015 (REV No. 2) TO PAPER PRESSPAHN AMMUNITION.

1.* Размер для справок.

2. Остальные технические требования по ОСТ 3-4343-79.

1.* DIMENSIONS FOR REFERENCE.

2. REST TECHNICAL REQUIREMENTS AS PER OST 3-4343-79.

(a) DC: 7195-I. ALT. EQVT. MATL. ADDED.		10-5-18
D.C.(1):- 5422-I. DRG. SEALED.		5.10.90
D.C.(11):-1418-I(P). DRG. PROV. SEALED.		21.3.90.
AMENDMENTS.	SIG	DATE.

GROUP No. 41315 KD FOLDER/SHEET No. 38/22

DRG. No. АЦ8.684.378

	SHEET	WEIGHT	SCALE
PACKING		0.000026	2:1
BOARD ЭВ MATERIAL GOST 2824-75E	OPTO ELECTRONICS FACTORY DEHRADUN		

Нов. АЦ892-86 — 2.12.

Абызова — 2.09.

Удачин

Царькова — 11.

D.C.(11):-1418-I(P), 5422-I, 7195-I

26781 312