119

DRG.No.	IC	SS	S	AA	A	C	SST
	0204	03	02	00	11	002	00DA

GEN TOL FINE/MEDIUM/COARSE CLASS TO IS:2102

DRG CONVENTIONS CONFIRM TO INDIAN STD
DIMN IN mm UNLESS OTHERWISE STATED

CONTROL COPY No. 1

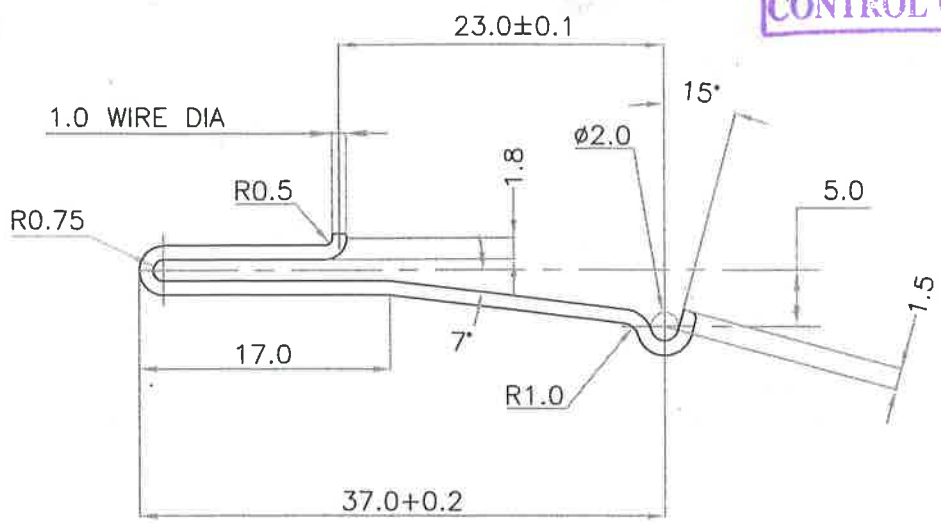

NOTE :
1) TOL.FOR ANGLES±1.0 DEGREE

Received on 29/11/15

S No	DATE	AUTHORITY	BRIEF RECORD	ZONE	CD	GO
					SIGN	

DRN KSD KSD CHD

APPD
DATE 07/03/2014 For Director

SEALED
DATE

SCALE 2:1 EST MASS

DESIGN AUTHORITY
ARDE
PUNE-21

MATERIAL:
STEEL TO IS:4454, (Pt-1) 2001, DH

PROTECTIVE FINISH: PHOSPHATED TO SPECN. IS:3618-1966, CLASS 'B'

TITLE :

SPRING PIN LOCKING CUP AND PISTOL GRIP

DRG.No.	IC	SS	S	AA	A	C	SST
	0204	03	02	00	11	002	00DA

PART No | DS CAT No | AHSP