AXIAL MODULE	0.4
No. OF TEETH	60
INTER AXIAL DISTANCE	17.6+0.1
TOLERANCE ON DIFFERENCE FOR ADJUSTMENT CIRCULAR PITCHES	0.01

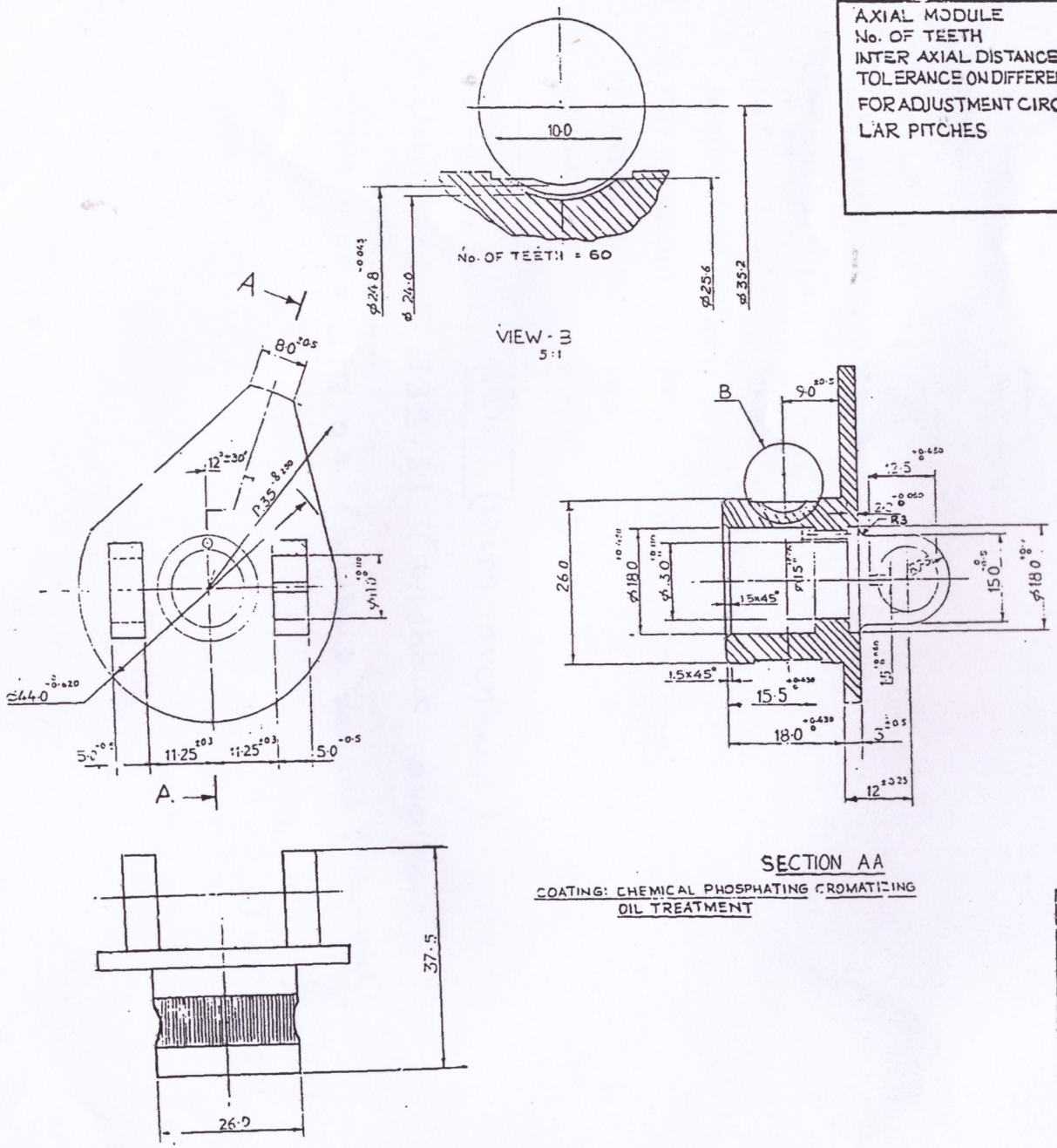

(b) D.C:-2188-I(P) MATL., SPECN. AMENDED			30.9.99
DC:-1919-I(P):-ORG. REDUCED, UPDATED & NEW COPY SEALED IN SUPERSESSION OF EXISTING ONE			24.1.95
(a) D.C: 1887-I(P). MATL. AMENDED.			26.8.94
DC(I):- 1426-I(P):- ORG. PROV. SEALED.			17.4.90
AMENDMENTS	CHD.	SIG.	DATE

FOR EXPLANATION OF DIMENSIONING ETC., SEE CQA(I) GUIDE No. 001-1992
THIRD ANGLE PROJECTION
DIMENSIONS ARE IN mm.

DRN		APPROVED
TCD		FOR CONTROLLER
CHD		(I) D.DUN
CHD		DATE

MATL & SPEC:-
(a)
(b) STEEL BS: 970 Pt. 1 1983 Gde. 080 M 40 OR STEEL 5517-1993 DESIG. 40 C8.

USED ON	
BASED ON	
CAT/PT No.	
DRG No.	CQA(I) 46/13
SCALE	1 : 1 SH OF

FINISH & SPEC:-
AS ABOVE

TITLE :-

GEAR

DC(I):- 1426-I(P), 1887-I(P), 1919-I(P), 2188-I(P)

REDUCED DRG. PREPARED AT CQA(I) DEHRA DUN
PREPARED BY : CS Chauhan
CHECKED BY :
DATE: 11.11.94