PART NO.	
QX 1492	DRG. CONVENTIONS CONFORM TO IS: SPECIFICATIONS DIMENSIONS ARE IN mm.

DC 27505-A
DC 36123-A

USED ON

QX 191 GE
QX 192 GE
QX 207 GE
QX 206 GE
QX 227 GE
QX 228 GE
QX 229 GE
QX 236 GE
QX 237 GE
QX 267 GE
QX 271 GE
QX 268 GE
QX 272 GE
IQX 46 GE

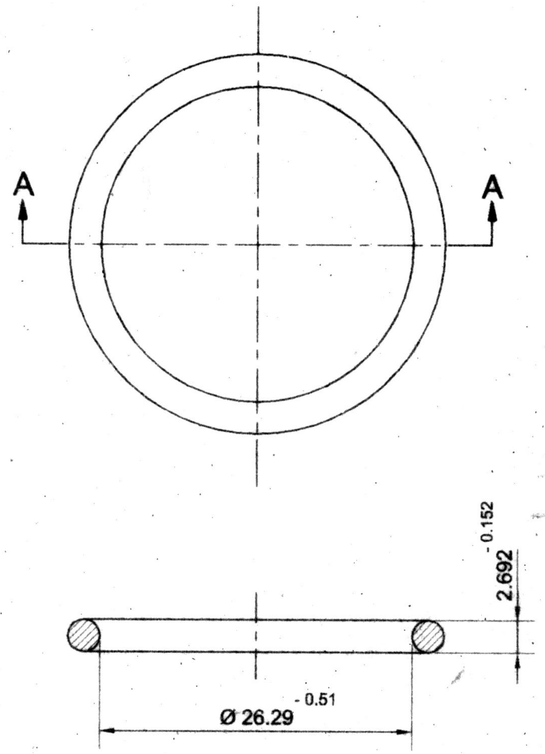

SECTION A - A

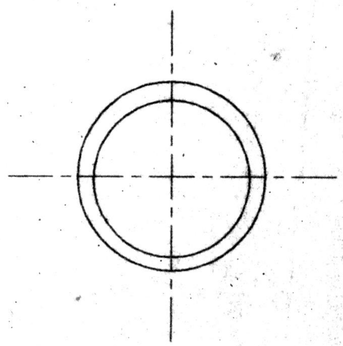

ACTUAL SIZE

ALL SPECIFICATIONS REFER TO THE CURRENT APPROVED ISSUE.

IMPORTANT :-

FINISHED SURFACE MUST BE FREE FROM FLASH AND ANY KIND OF BLEMISH.

MATERIAL :-

VULCANISED NATURAL RUBBER COMPATIBLE WITH EXPLOSIVE TO SPEC. IND / ME / 728 : 1994 COMPOUND DESIGNATION Z 12 C OF LATEST ISSUE.

R. NO.	DATE	AUTHORITY	REVISION	ZONE	AHSP	D.O.
	8 - 8 -2005		REDRAWN WITHOUT CHANGED.			
			PREVIOUS DC Nos :- 27505-A, 27930-A, 28272-A, 30066-A, 30875-A, 30967-A, 35609-A & 36123-A.			SD/-

DRG.SEALED:- 21-04-1965.

DRN:- R. Hambler C.D'MAN | CHD:- O I/C D.O. | TRD:- KMK | COMP:-
SCALE:- 2:1 & 1:1
EST.MASS:- 492.2 mg.
APPD. FOR CQA(A)
GAUGE SCHD:- I - 1514
DATE:-
MATL:- AS ABOVE.
PROTECTIVE FINISH:- NOT APPLICABLE.

ASSY.DRG. SEE 'USED ON'

DESIGNER'S REF. SI / 14093 / 1216

PART NO. QX 1492

D.S. CAT NO. NOT APPLICABLE

AHSP: CQA(A) KIRKEE

RING

BASED ON D 2 (L) 8412.