| PART No. | |
|---|---|
| IQX 7 | DRG. CONVENTIONS CONFORM TO IS SPECIFICATIONS |
| | DIMENSIONS ARE IN mm |

D.C.I. 20471-A

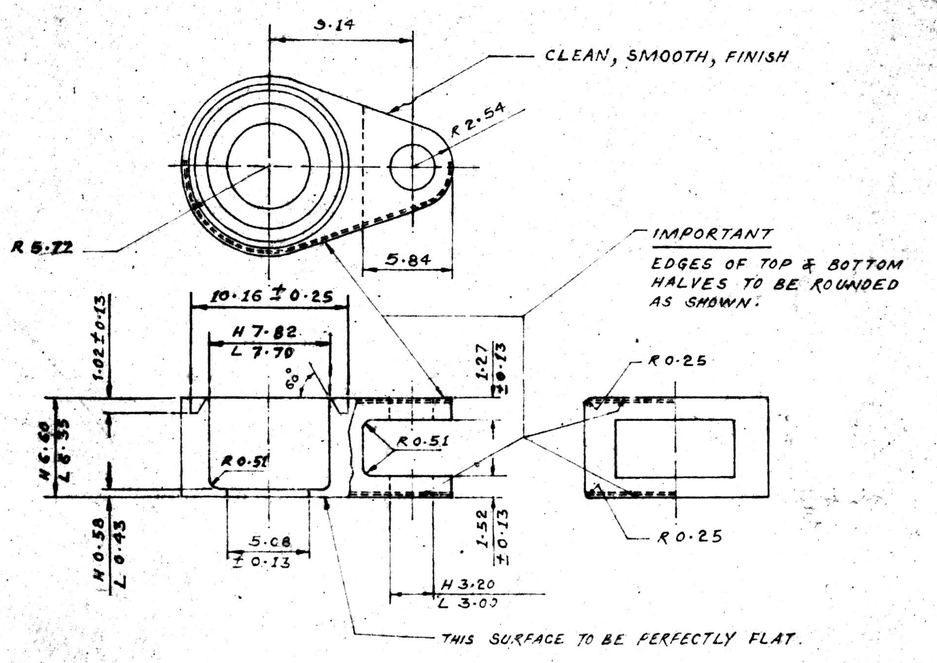


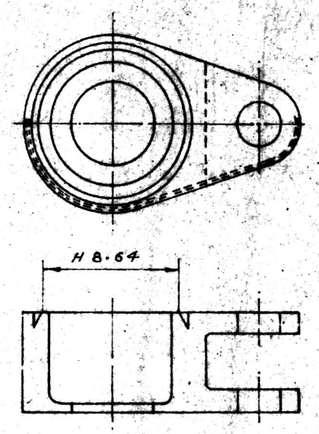


**ALTERNATIVE METHOD OF MANUFACTURE**

ALL OTHER DIMENSIONS AND PARTICULARS SAME AS ABOVE

**NOTE :-**

a) TOLERANCE ON UNTOLERANCED DIMENSIONS
FOR ONE DECIMAL PLACE ± 1·3
FOR TWO OR MORE DECIMAL PLACES ± 0·13

b) TOLERANCE ON UNTOLERANCED ANGLES
GIVEN IN DEGREES ± 30' &
GIVEN IN DEGREES & MINUTES ± 5'

TO BE PASSIVATED TO SPEC. L 10205 (LATEST ISSUE)

**MATERIAL :-**

BRASS TO SPEC BS 2874 : 1986 CZ 121 Pb 3 IN M CONDITION OR CZ 124 HALF HARD CONDITION.

| R. No. | DATE | AUTHORITY | REVISION. | ZONE | AHSP SIG | D.O. |
|---|---|---|---|---|---|---|
| | 16.8.02 | | SCANNED WITHOUT CHANGE. | | | |
| | 29-3-96 | DC 36103-A | ASSY. DRG No IQX 79 GE ADDED | | | |
| | 22-8-94 | DC 35781-A | NEW MASTER COPY SEALED IN SUPERSESSION OF THE EXISTING DILAPIDATED COPY | | | |
| | ~~28-5-94~~ | ~~DC 35717-A~~ | ~~NEW COPY OF DRG SEALED IN SUPERSESSION OF THE EXISTING SEALED DILAPIDATED MASTER COPY BEARING SAME DRG NO~~ | | | |
| | 4-5-94 | DC 35704-A | DRG. FORMAT BOX ENTRIES ADDED MATERIAL SPEC UP-DATED | | | |
| | 30.12.92 | DC 35434-A | DIM'S AMENDED UP TO 2 DECIMAL POINTS & ASSY DRG REF ADDED | | | |
| | 28-3-90 | DC 34831-A | MATERIAL Pb3 WAS 3Pb AND (LATEST ISSUE) ADDED. | ED-1 | | |
| | 25-8-88 | | RETRACED WITHOUT CHANGE | | | |
| | | | PREVIOUS D C's (1) Nos 20471-A, 20582-A, 21373-A, 22240-A, 27436-A, 28255-A, 29803-A, 29959-A, 30249-A, 30649-A, 30973-A, 31145-A, 31857-A, 32648-A, 33317-A & 34263-A. | | | SD/- |

DRG SEALED :- 6-2-48

| DRN | CHD. | TRD RDT | COMP |
|---|---|---|---|
| C.D'MAN | O/C DO | SCALE :- 4/1 | |
| APPD | | EST MASS - | |
| | | GAUGE SCHD :- I-576 | |
| | FOR C Q A (A) | DATE :- | |

MATL - AS STATED.

PROTECTIVE FINISH :- AS ABOVE

ASSY DRG IQX 35 GE, IQX 79 GE IQX 41 GE ; IQX 33 GE

DESIGNER'S REF IAFO 38

PART No. IQX 7

D.S. CAT No. NOT APPLICABLE

AHSP :- C.Q.A.(A). KIRKEE

# SHUTTER