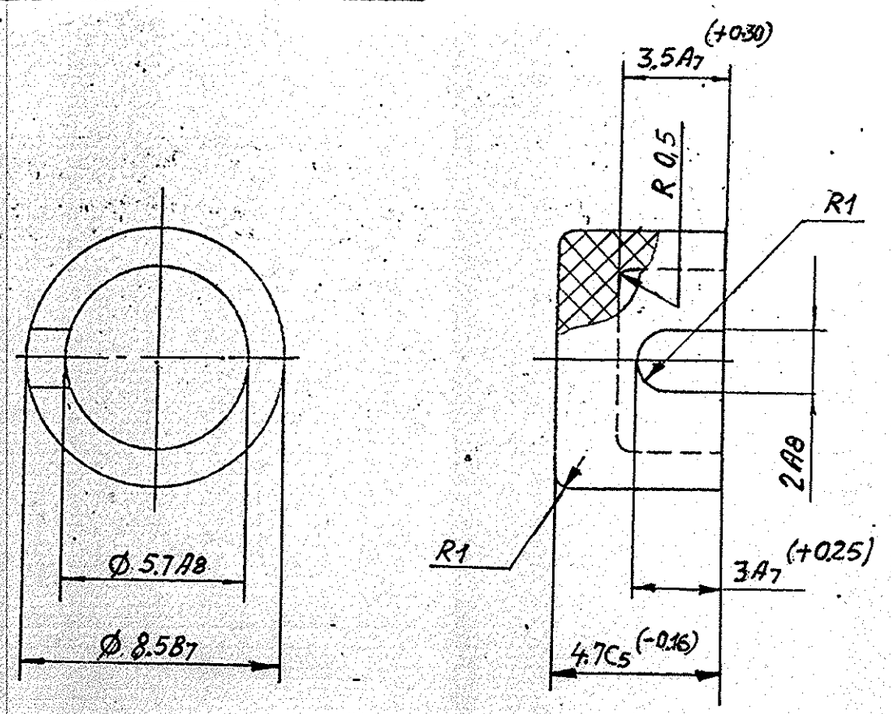

CAP

Scale 5:1. Material: polyethylene 15803-020, grade 1, ГОСТ 16337-77. Mass:0.001

(1) 1. May be made of polytetrafluorethylene T1, ТУ 6-05-810-76.
2. Ensure all sizes by tools
3. Mould working surface roughness 0.63.
4. Blunt sharp edges to R≈0.2 mm
5. Refer to ОСТ 4 ГО.005.051 for the rest of technical requirements
6. Mark and stamp K on the lot tag

ALT. MATL : ARNITE-TYV-261 (THERMO PLASTIC POLYSTER, GLASS FIBRE REINFORCED INJECTION MOULDING GRADE MAY BE USED. (CRAR /948154/1/X dt 11.9.89)

FINAL DRG. FOR MFR. AT OFT
DATE 09-07-91
UP-DATED
CHECKED
F / M—PROJ.
S C T — COPY VERIFIED : 12.08.91
DGM / PROJ. 26/8/91

[redacted]

2A42

2A42.07.009

CAP
Колпачок

Лит	Масса	Масштаб
0₁	0,001	5:1

Лист | Листов 1

Полиэтилен 15803-020
сорт 1 ГОСТ 16337-77

[redacted]

Перв. примен.
Справ. №
Подп. и дата
Инв. № дубл.
Взам. инв. №
Подп. и дата
Инв. № подл.
2A42 | Изм. | Лист | № докум. | Подп. | Дата