PART No. 2A42.05.014

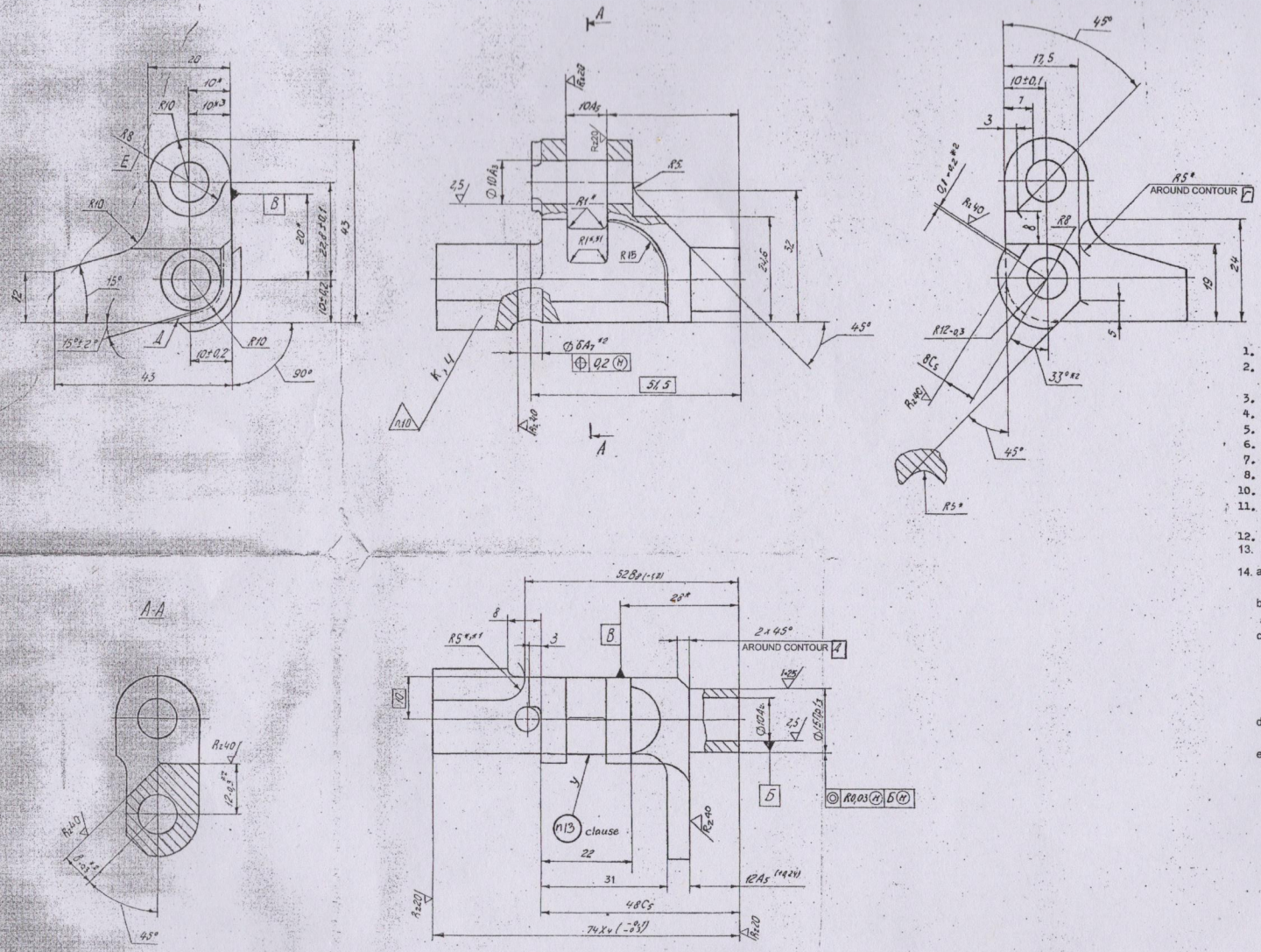


1. Unspecified casting radii approx. 1.5 mm.
2. Additionally perform check of impact strength in accordance with Section 3, ГОСТ 977-75.
3. Inner corners of R≈0.4 mm.
4. Blunt sharp edges to R≈0.6 mm.
5. *Ensure sizes by tools.
6. *1 Sizes not in projection.
7. *2 Sizes preset in relation to surfaces B and B.
8. *3 Size given for radius E.
10. Stamp.
11. Casting defects on the surfaces machined according to standard are permissible.
12. Tolerable sulphur and phosphorus content is 0.025%
13. Mark serial No. of part with type No - 3 - GOST 2930 - 62.
14. a) Radiographic acceptance standard of the casting should be as per ASTM-E-446-84, Level II

b) 100% of the advance sample (not less than 5) will be subjected to Radiographic Test.

c) Radiographic test of advance sample will be carried out by CQA (MET), Ichapur

OR

The area Quality Assurance Officer concerned would get the Radiographic Test done in his presence and forward the plates to CQA (MET), Ichapur for sentence and approval of the mould.

d) Bulk production would commence only after the Mould and material has been approved by CQA (MET), Ichapur.

e) 5% of the casting selected at randum from the bulk would be subjected to Radiographic test. This may be done under the arrangement of the Area Quality Assurance Officer and sentence may be awarded by him based on the standard of the advance samples cleared by CQA (MET), Ichapur.

MATERIAL : CASTING 30 x TCA-KT 55-II, OCT 3-4365-79

INDIGS MATL :- IS: 10343-1999 GR 18Q
WITH THE FOLLOWING CHEMICAL COMPOSITION.

| C% | Si% | Mn% | Cr% | Mo% | S% | P% |
|---|---|---|---|---|---|---|
| 0.22 | 0.3 | 0.5 | 0.9 | 0.15 | 0.035 | 0.035 |
| 0.29 | 0.6 | 0.8 | 1.2 | 0.25 | Max. | Max. |

C-5014

UN CONTROLLED COPY
CERTIFIED CORRECT COPY OF APPROVED DRAWINGS AT THIS DATE 30/01/84
DESIGN & DRAWING OFFICE, ORDNANCE FACTORY, TIRUCHIRAPPALI-620 016.

| DATE | AUTHORITY | ZONE | AMENDMENTS | SIG AHSP | SIG DO |
|---|---|---|---|---|---|
| 14-9-15 | 19446-W | 8/13 | INDIGS MATL AMENDED | | |
| 13-9-06 | | | SCANNED & PRINTED WITHOUT CHANGE | | |

PREV DC Nos:- 16407-W, 16657-W, 16975-W, 18100-W, 18149-W, 18174-W, 18193-W, 18383-W & 18845-W dated 13-01-04

DRG SEALED:- 18174-W Dt. 22-09-95

DO CQA(W)

DRAWN:- | CHD:- | ASSY DRG:-
SCANNED:- PKA | CHD:- | DATE:-
C/D'MAN | DO | AHSP FOR CQA(W) | SCALE:- 2 : 1
ESTD mass:- 0.13
MATERIAL:- AS ABOVE
PROTECTIVE FINISH:-

CARRIER कैरियर

CQA(W), JABALPUR

DESIGN No.

PART No. 2A42.05.014

DS CAT No.