DRG.No.	IC	SS	S	AA	A	C	SST
	0204	03	02	02	20	002	00DD

GEN TOL FINE/MEDIUM/COARSE CLASS TO IS:2102

DRG CONVENTIONS CONFIRM TO INDIAN STD DIMN IN mm UNLESS OTHERWISE STATED

Received on 29/11/15

Certified as correct copy of drg. on.....

Work Manager STANDARD CELL

CONTROL COPY No. 07

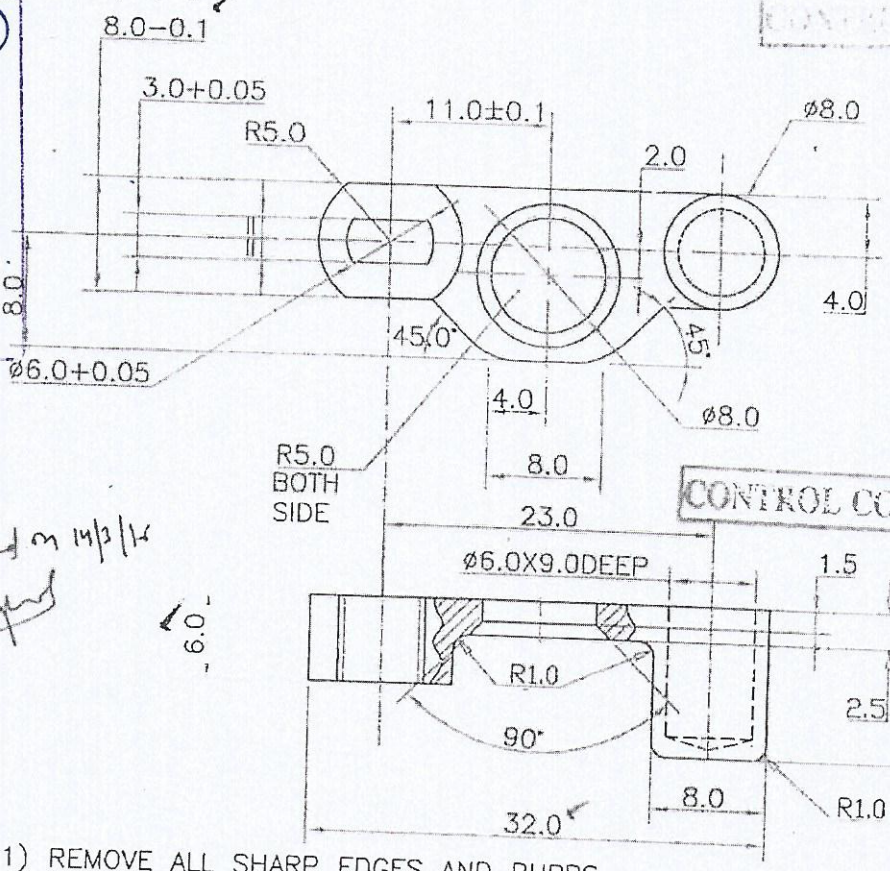

CONTROL COPY No. 1

Drg verified on 14/3/16

NOTES: 1) REMOVE ALL SHARP EDGES AND BURRS.
2) TOLERANCE FOR ANGLES ± 30' UNLESS OTHERWISE STATED.
3) HARDNESS: 500 – 550 HV
4) HEAT TREATMENT:– CASE HARDENED TO A DEPTH OF 0.13 TO 0.26
5) ALT. MATERIAL; MIM 9310 (AISI–9310, EQUIVALANT) HARDNESS–500–600HV. CASE DEPTH–0.1 TO 0.3mm.

S No	DATE	AUTHORITY	BRIEF RECORD	ZONE	CD	GO
3	9/11/2015	M–29	DRG. REVISED	–		
2	14/07/2015	M–14	DRG. REVISED	–		
1.	21/01/2011	M–14	DIMN 7.0 DEEP ADDED DIMN 7.0 ADDED	C–3,4 C–3		

SIGN

DRN KSD. CHD

APPD DATE 9/11/2015 For Director

SEALED DATE

SCALE 2:1 EST MASS

DESIGN AUTHORITY ARDE PUNE411021

MATERIAL: STEEL TO IS:4432 1988, Gr 13Ni13Cr3 (En–36B)

PROTECTIVE FINISH: PHOSPHATED TO SPECN. IS:3618–1966 , CLASS 'B'

TITLE

LEVER STUD CHANGE LEFT

DRG.No.	IC	SS	S	AA	A	C	SST
	0204	03	02	02	20	002	00DD

PART No DS CAT No AHSP