ODD/C/793/3

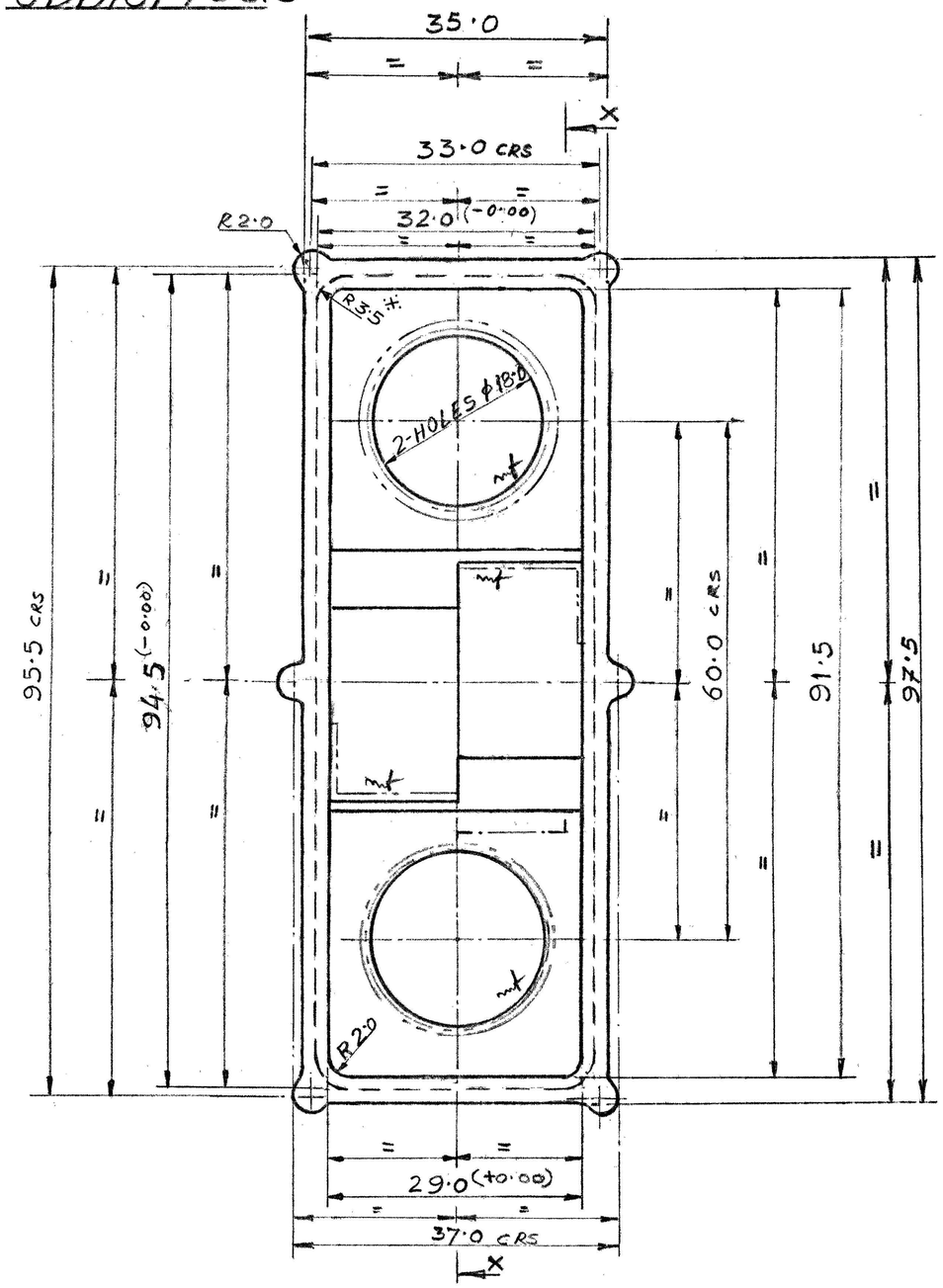

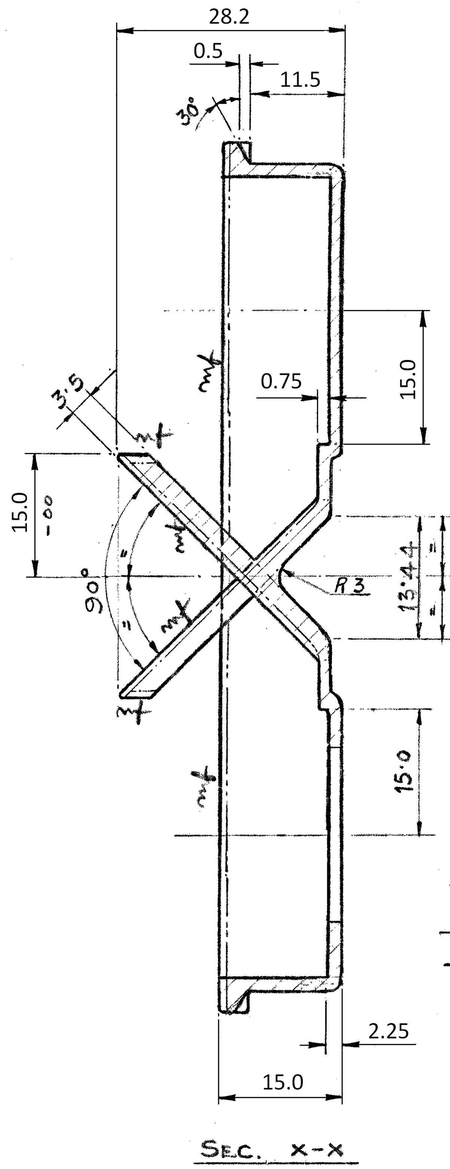

NOTE:- I

1. UNSPECIFIED RADII TO BE R 1·0 MAX.
2. COMPONENT DRG. SHOWN IN CHAIN DOTTED LINES.
3. SURFACES MARKED 'mf' TO BE MACHINED.
4. MACHINING ALLOWANCES ARE ADDED BUT SHRINKAGE ALLOWANCE ARE NOT INCLUDED IN THE DIMENSIONS.

II. UNLESS OTHERWISE STATED THE FOLLOWING TOLERANCE WILL BE APPLICABLE :-

UP TO 25 MM	±0·12MM
OVER 25 MM TO 37 MM	±0·20MM
OVER 37MM TO 50 MM	±0·24MM
OVER 50 MM TO 75 MM	±0·36MM
OVER 75 MM TO 100 MM	±0·48MM
& SO ON.	

MATL :- AL. ALLOY

SPECN :- IS: 617-4600 (A6)M - 1975 II

ORDNANCE FY.
DEHRADUN.

DR :-
TR :-
CH :-
APPROVED
CH/MAN D.O. WM/P-1

GOGGLE NIGHT VISION PASSIVE MK-II
COVER PLATE E.P.

DRG. No
IRDE 2023/30

TITLE OF CASTING	OPERATION
INVESTMENT CASTING	

	D/- 07-12-90	SCALE :- 2:1
	MATL. AS ABOVE	TREAT -
* D.A. No. 03/93 DT. 10-4-93	SHTS. 1	SHT. No 1
D.A. No. 15/92 DT 22-4-92	DRG. No	
D.A. No. 56/91 DT 29-12-91	O.D.D./C/793/3	
AMENDMENTS		