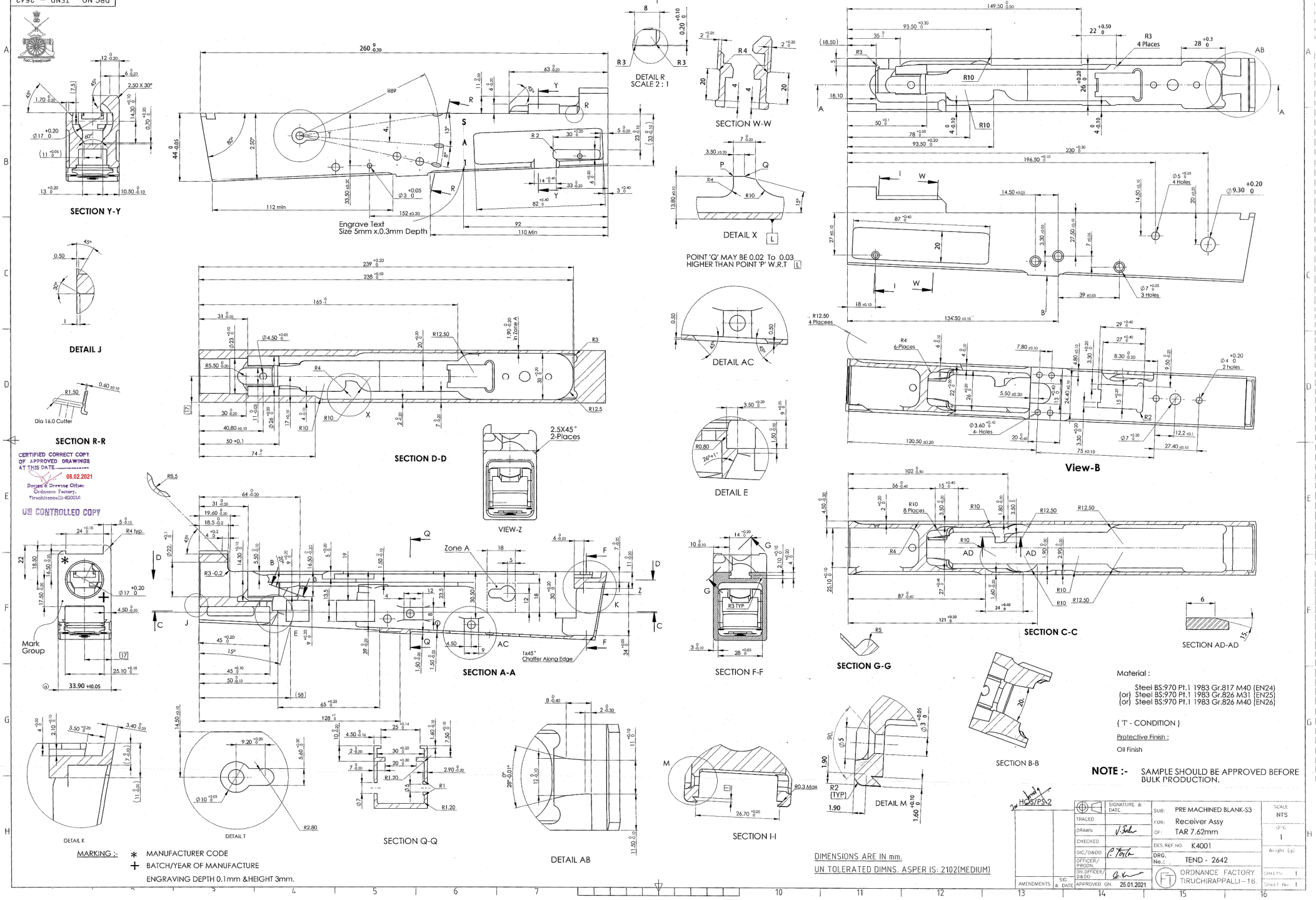
DRG.NO. TEND - 2642
SECTION Y-Y
DETAIL J
SECTION R-R
Dia 16.0 Cutter
CERTIFIED CORRECT COPY OF APPROVED DRAWINGS AT THIS DATE 08.02.2021
Design & Drawing Office Ordnance Factory, Tiruchirappalli-620016
UN CONTROLLED COPY
Engrave Text Size 5mm x.0.3mm Depth
DETAIL R SCALE 2 : 1
SECTION W-W
DETAIL X
POINT 'Q' MAY BE 0.02 To 0.03 HIGHER THAN POINT 'P' W.R.T
DETAIL AC
DETAIL E
SECTION D-D
VIEW-Z
2.5X45° 2-Places
SECTION A-A
1x45° Chaffer Along Edge
Zone A
Mark Group
SECTION F-F
SECTION G-G
View-B
SECTION C-C
SECTION AD-AD
SECTION B-B
DETAIL K
DETAIL T
SECTION Q-Q
DETAIL AB
SECTION I-I
DETAIL M
MARKING :- * MANUFACTURER CODE
+ BATCH/YEAR OF MANUFACTURE
ENGRAVING DEPTH 0.1mm &HEIGHT 3mm.
DIMENSIONS ARE IN mm.
UN TOLERATED DIMNS. ASPER IS: 2102(MEDIUM)
Material :
Steel BS:970 Pt.1 1983 Gr.817 M40 (EN24)
(or) Steel BS:970 Pt.1 1983 Gr.826 M31 (EN25)
(or) Steel BS:970 Pt.1 1983 Gr.826 M40 (EN26)
('T' - CONDITION)
Protective Finish :
Oil Finish
NOTE :- SAMPLE SHOULD BE APPROVED BEFORE BULK PRODUCTION.
HQS/PS-2
SIGNATURE & DATE
TRACED
DRAWN
CHECKED
OIC/D&DO
OFFICER/PRODN.
DIV.OFFICER/D&DO
APPROVED ON. 25.01.2021
AMENDMENTS
SIG. & DATE
SUB: PRE MACHINED BLANK-S3
FOR: Receiver Assy
OF: TAR 7.62mm
DES.REF.NO. K4001
DRG. No.: TEND - 2642
ORDNANCE FACTORY TIRUCHIRAPPALLI-16.
SCALE NTS
QPC 1
Weight (g)
SHEETS 1
SHEET No. 1