402-06-3

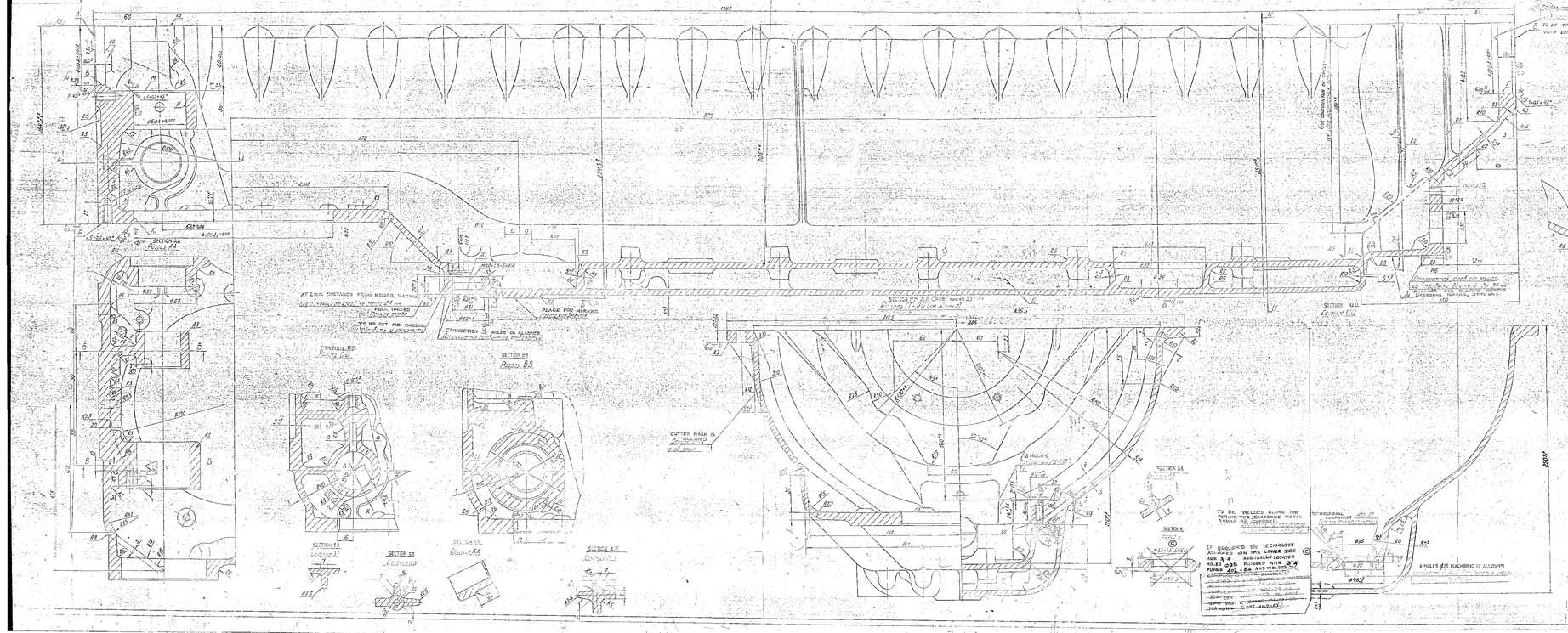
SECTION AA
SECTION BB
SECTION CC
SECTION DD
SECTION EE
SECTION FF
SECTION GG
SECTION HH
SECTION KK
SECTION LL
SECTION MM
SECTION NN
SECTION PP
SECTION QQ
SECTION RR
SECTION SS
SECTION TT
SECTION UU
SECTION VV
SECTION WW
SECTION XX
SECTION YY
SECTION ZZ

402-06-3 SH2

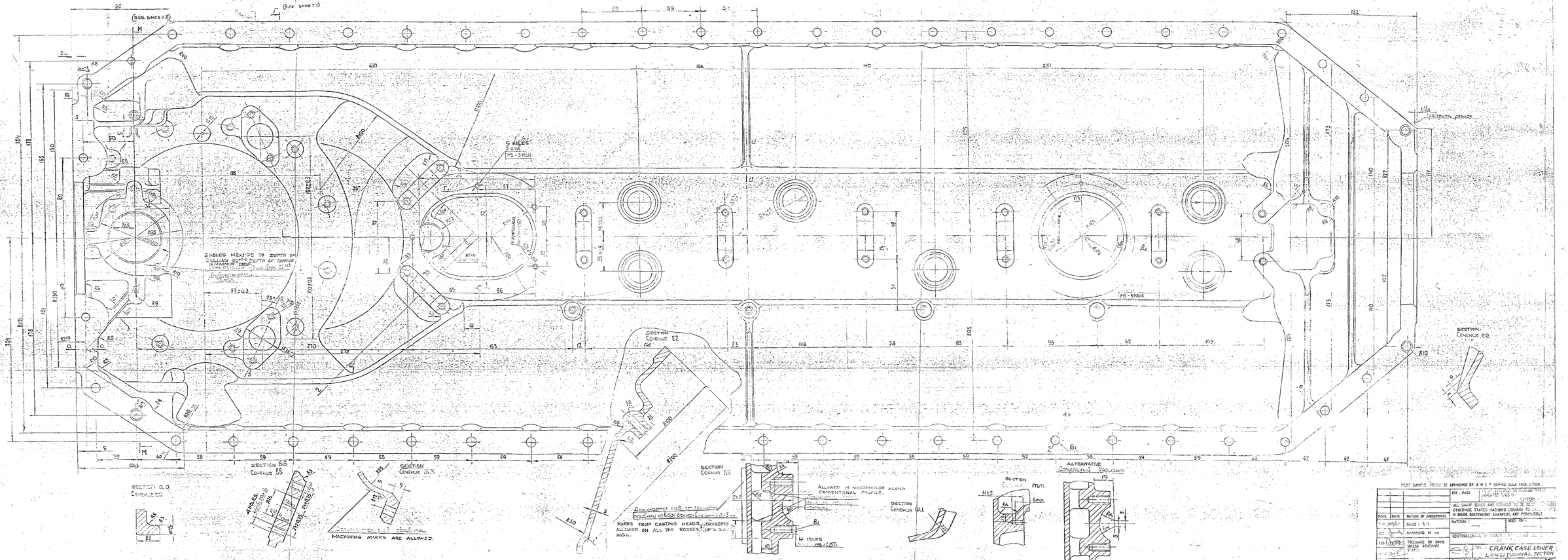
(SEE SHEET 1)
(SEE SHEET 3)
2 HOLES M8x1.25 TO DEPTH OF
5 HOLES
M5-5H6H
SECTION BB
SECTION AA
SECTION
SECTION
SECTION
SECTION
SECTION
ALTERNATIVE
MACHINING MARKS ARE ALLOWED.
MARKS FROM CASTING HEADS, DRESSING ALLOWED ON ALL THE BOSSES (UP TO 3mm HIGH).
ALLOWED TO MANUFACTURE ALONG CONVENTIONAL PROFILE.
4 HOLES
M8x1.25H
SECTION
SECTION
SECTION
PLOT SAMPLE WOULD BE APPROVED BY A.H.S. & DEMUS SULK FRICTION.
ALL SHARP EDGES AND CORNERS TO BE
OTHERWISE STATED MACHINED CORNERS TO
& INSIDE EQUIVALENT CHAMFERS ARE PERMISSIBLE
SCALE : 1:1
DIMENSIONS IN mm
CONTROLLEVEL
CRANK CASE LOWER
LONGITUDINAL SECTION
402.06.3

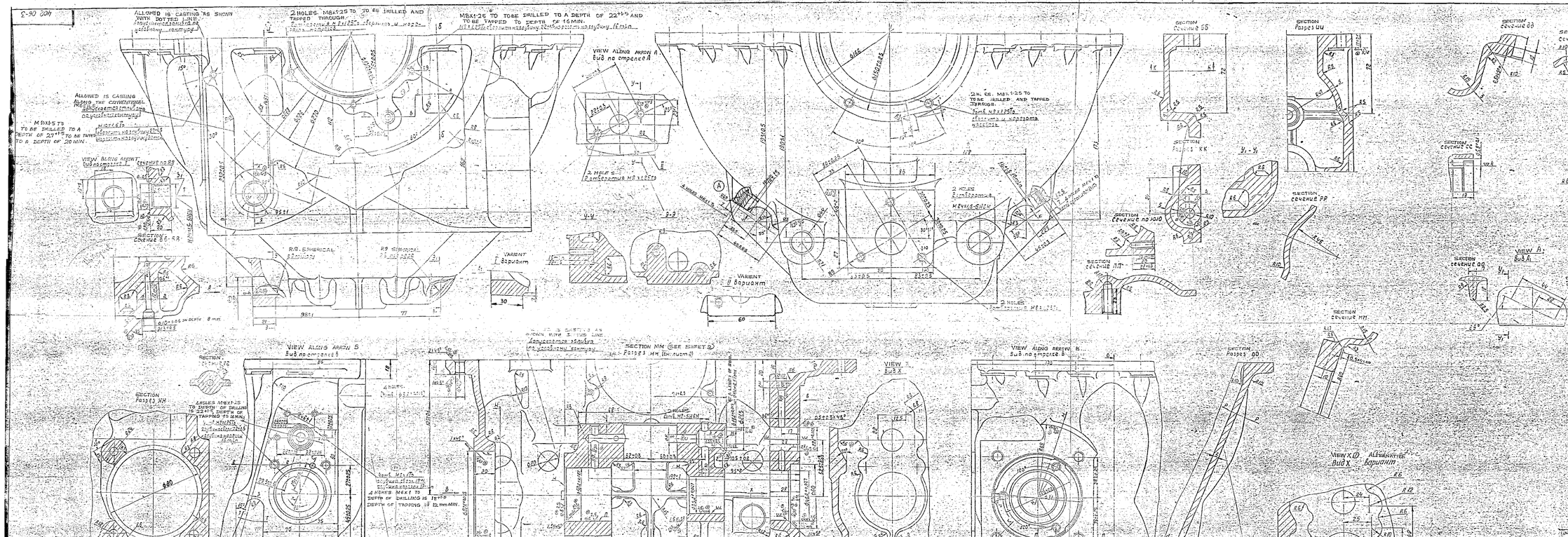

PILOT SAMPLE SHOULD BE APPROVED BY A K S P BEFORE BULK PRODUCTION

				EST. MASS	TO BE STAMPED OR MARKED WITH INDICATED TMK ®
A	21.12.06	ALT. COMMITTEE MEETING MINUTES PL.NR.3.2.ST.18-12.07			LETTERS

ALL SHARP EDGES AND CORNERS TO BE ROUNDED UNLESS OTHERWISE STATED INCLUDED CORNERS TO HAVE R 0.75 SIDE R MORE EQUIVALENT CHAMFERS ARE PERMISSIBLE

DRW			MATERIAL	WEIGHT
DES			CERTIFICATE OF QUALITY	SHEET NO.
TCD			AVIA	
APPD			CRANKCASE Lower	
DATE			402-06-3 SHT 2	

402-06-3

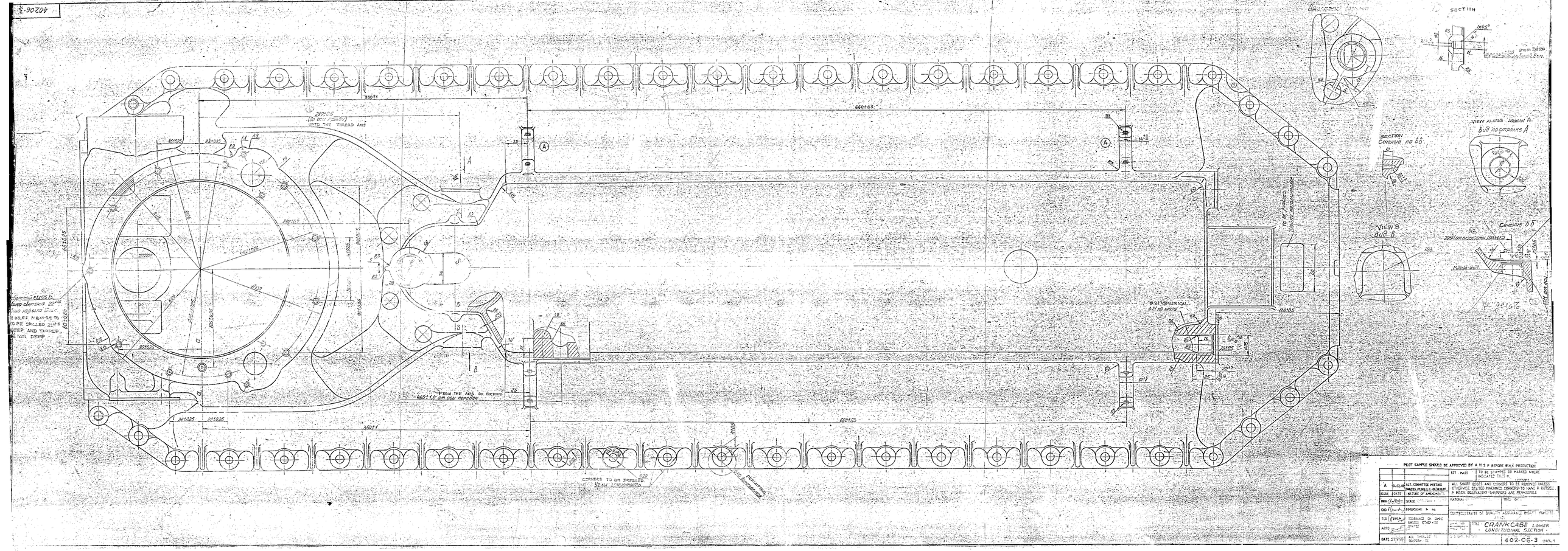
SECTION
VIEW ALONG ARROW A
SECTION Cerevue no bb.
VIEW B
Cerevue bb
CORNERS TO BE BREKEN
PLOT SAMPLE SHOULD BE APPROVED BY A.N.S.P. BEFORE MAX PRODUCTION
ALL SHARP EDGES AND CORNERS TO BE REMOVED UNLESS OTHERWISE STATED. MACHINED CORNERS TO HAVE A OUTSIDE R WITH EQUIVALENT CHAMFERS ARE PERMISSIBLE
CRANKCASE LOWER
LONGITUDINAL SECTION
402-06-3

DRAWING NUMBER 3301-16-24 | SHEET No. 2 OF 6

AFTER MACHINING OF GENERATOR LEG CUT THE BOSS AND DRESS.

12 HOLES M8x1.25T₂
DRILLING DEPTH 22⁺¹·⁵
THREAD CUTTING DEPTH 16 MIN

2 HOLES M10x1.5T₂
DRILL AND CUT THREAD THROUGH

4 HOLES M10x1.5T₂

2 HOLES M12x1.5T₂

4 HOLES M12x1.5T₂

2 HOLES M12x1.5T₂

R5 MAX

DRAWING REVISED BASED ON AVERAY TURBINE "BIRTY"

SEE REPLACED 3301-16-24, SHEET 2 OF 6 EDIT. & VIEW METRICALTO

Ж - Ж

DRESSING IS ALLOWED BEFORE BAKELITE COATING AS PER STANDARD

Е - Е

ROUND THE SHARP EDGES

Z₁ - Z₁

2 BOSSES

Z - Z

Н - Н

2284±1 FROM THE AXIS OF CRANKSHAFT

2 HOLES M18x1.5-6H8H

Н - Н

SPHERICAL

2 HOLES M8x1.25T₂

Г₁ - Г₁

360°± FROM THE AXIS OF CRANK SHAFT

Nº MELTING

V ALTERNATE

Б - Б

Р - Р

С - С

М - М

Т - Т

О - О

У - У

Ш

Г

А

А₂ - А₂

Е₂ - Е₂

6 HOLES Ø5.8

2 HOLES Ø3

П

Б

PILOT SAMPLE SHOULD BE APPROVED BY A.H.S.P. BEFORE MASS PRODUCTION

DEF. SEE SQA	TO BE STORED OR SHIPPED WHERE PROCESSED TILL A.H.S. (ATTACH)						
ALL SHARP EDGES AND CORNERS TO BE BROKEN UNLESS OTHERWISE STATED. MACHINE CURVED SURFACE CORNERS TO HAVE R. .1/2 FOR R. .1MIN EQUALLY CHAMFER ARE PERMISSIBLE.							
28	06.10.88	MOTA.	SD. 3882-367 (F-C.B)				
REVISE DATE		ALTERATE OF REFERENCE					

DRW		MATERIAL	
CHK			
APPD			
STAGE			
PARTS USED ON			
INTERCHANGE ON SHIPS UNLESS OTHERWISE			
ALT. SUPERSEDES			
ALT. SUPERSEDED TO			
CONFORM TO			

ISSUED ON
NOM. 2007.3485-75
Ca. 3300-05-07
CONTROLLATE OF QUALITY ASSURANCE (QUALITY VERIFICATION) AYAN

TITLE: UPPER CRANKCASE (UPPER TOP VIEW)

A-B UNIT NUMBER

DRAWING NUMBER 3301-16-24 | REV. 0

SHEET 2 OF 6

ORIGINAL SCANS
3301-16-24
SHEET № 3 OF 4

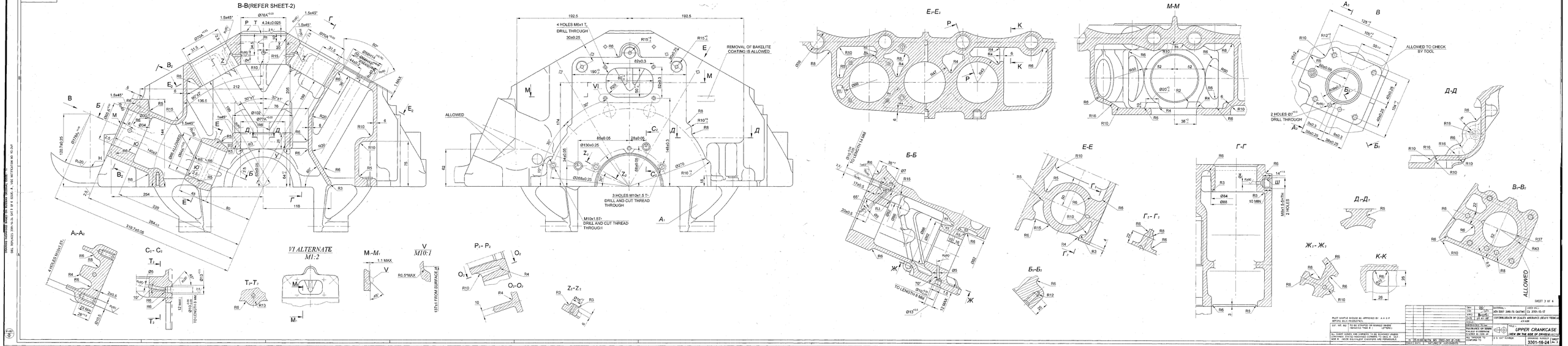

			Изм.	Лист	Nдок.	Подпись	Дата
			Разраб.				
			Пров.				
			Т.контр.				
			Н.контр.				
			Утв.				

ЛИТ. | МАСС. | МАСШТАБ.

ПЕРВИЧНОЕ ПРИМЕНЕНИЕ

ПОДПИСЬ И ДАТА

ИНВ.№ ДУБЛИК.

ВЗАМ.ИНВ.№

ПОДПИСЬ И ДАТА

ИНВ.№ ПОДЛИННИКА

ЛИТ. | МАСС. | МАСШТАБ. | ПЕРВИЧНОЕ ПРИМЕНЕНИЕ | ПОДПИСЬ И ДАТА | ИНВ.№ ДУБЛИК. | ВЗАМ.ИНВ.№ | ПОДПИСЬ И ДАТА |

3301-16-24

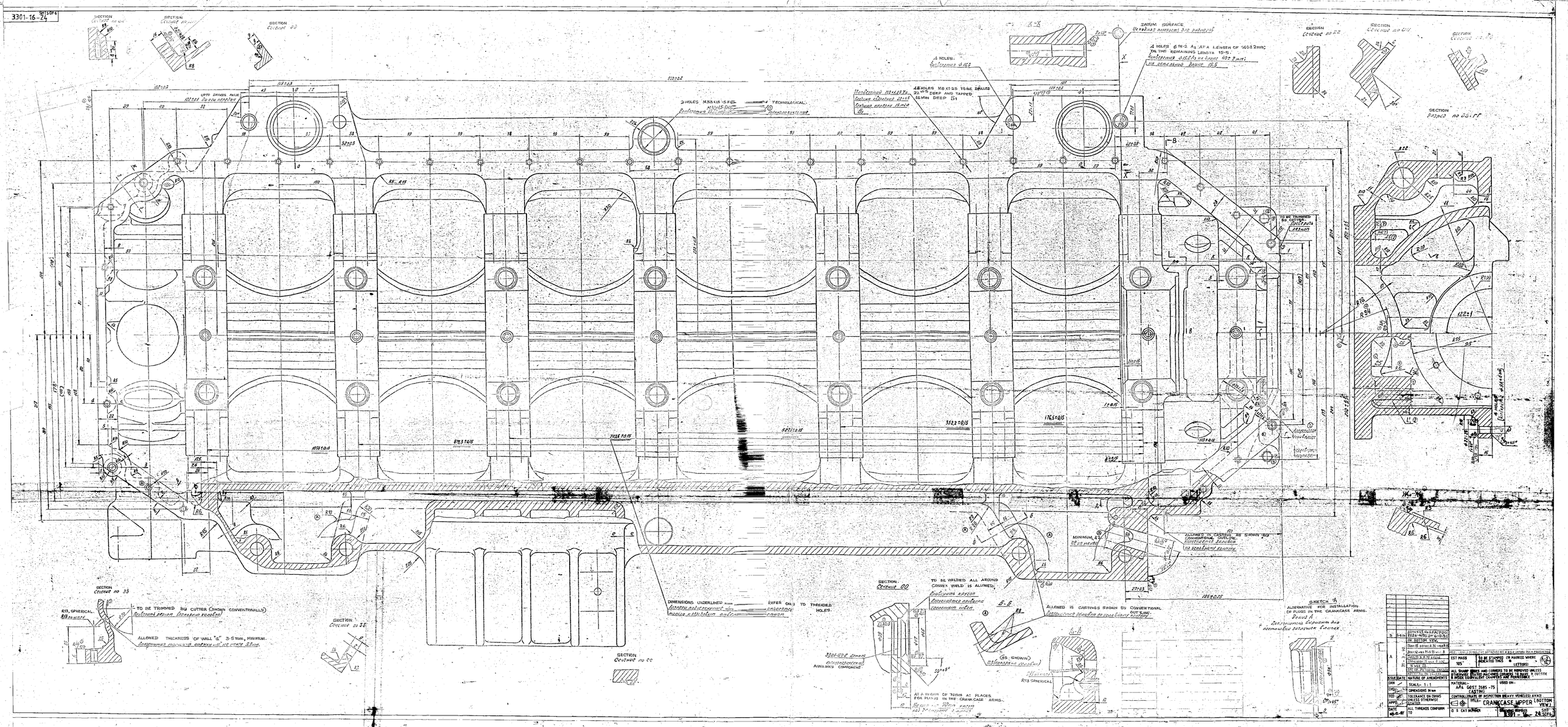
SECTION
SECTION
SECTION
DATUM SURFACE
SECTION
SECTION
SECTION
UPTO DRIVES MAIN
2 HOLES M30X1.5-6H
TECHNOLOGICAL
48 HOLES M8X1.25 TO BE DRILLED 23.5+0.5 DEEP AND TAPPED 16 MIN DEEP
4 HOLES
4 HOLES ⌀16-2 A5 AT A LENGTH OF 510±2 mm; ON THE REMAINING LENGTH 15-5.
TO BE TRIMMED
SECTION
SECTION
SECTION
SECTION
R13, SPHERICAL
TO BE TRIMMED BY CUTTER (SHOWN CONVENTIONALLY)
ALLOWED THICKNESS OF WALL "a" 3-5 mm, MINIMUM.
SECTION
SECTION
DIMENSIONS UNDERLINED
REFER ONLY TO THREADED HOLES.
SECTION
TO BE WELDED ALL AROUND
CORNER WELD IS ALLOWED.
AT A WIDTH OF 70 mm AT PLACES FOR RINGS IN THE CRANK CASE ARMS.
AUXILIARY COMPONENT
R13 SPHERICAL
ALLOWED IN CASTINGS SHOWN BY CONVENTIONAL OUTLINE.
MINIMUM, 4.7
ALLOWED IN CASTINGS AS SHOWN BY CONVENTIONAL OUTLINE.
SKETCH A
ALTERNATIVE FOR INSTALLATION OF PLUGS IN THE CRANKCASE ARMS.
SCALE A
ALL SHARP EDGES AND CORNERS TO BE REMOVED UNLESS OTHERWISE INDICATED. MACHINED CORNERS TO BE R, R INSIDE R, R OUTSIDE
MATERIAL
AM GOST 2685-75 (CASTING)
USED ON
SCALE 1:1
DIMENSIONS IN mm
TOLERANCE ON DIMS UNLESS OTHERWISE STATED
ALL THREADS CONFORM TO
CONTROL (PART OF INSPECTION HEAVY VEHICLES) AVAZ
TITLE CRANKCASE UPPER (BOTTOM VIEW)
EST MASS 105
SO BE STAMPED OR MARKED WHERE INDICATED THUS
LETTERS
SHEET 1
3301-16-24 SHFS

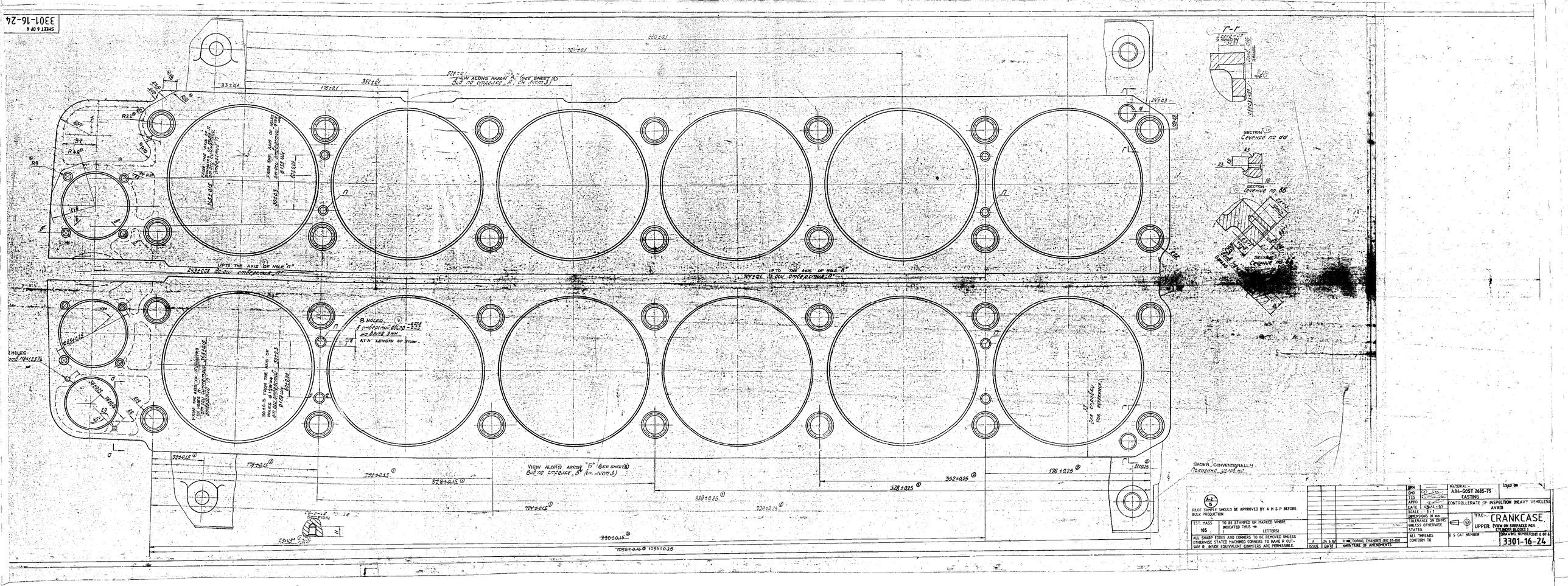
VIEW ALONG ARROW "A" (SEE SHEET 2)
BUD NO CRANKCASE, 3V (KM. JUCM 3)
VIEW ALONG ARROW "B" (SEE SHEET 2)
BUD NO CRANKCASE, 3V (KM. JUCM 3)
UP TO THE AXIS OF HOLE "n"
UP TO THE AXIS OF HOLE "n"
8 HOLES
22 DRIVE PIN
SECTION
Cavence no dd
SECTION
Cavence no DS
SECTION
Cavence no DS
SHOWN CONVENTIONALLY
Torsional vibration
PROT SAMPLE SHOULD BE APPROVED BY A N S P BEFORE BULK PRODUCTION
EST. MASS 105
TO BE STAMPED OR MARKED WHERE INDICATED THUS
LETTERS
ALL SHARP EDGES AND CORNERS TO BE REMOVED UNLESS OTHERWISE STATED MACHINED CORNERS TO HAVE R OUTSIDE R 0.5 (EQUIVALENT CHAMFERS ARE PERMISSIBLE.
A 24.5.87 FIRST EDITORIAL CHANGES (RK 81-08)
ISSUE DATE NATURE OF AMENDMENTS
MATERIAL A84-GOST 2685-75
CASTING
CONTROLLERATE OF INSPECTION (HEAVY VEHICLES) AVADI
TITLE CRANKCASE
UPPER. (VIEW ON SURFACES FOR CYLINDER BLOCK)
DRAWING NUMBER/SHEET & OF 6
3301-16-24
ALL THREADS CONFORM TO
D S CAT NUMBER

DRAWING NUMBER
3301-16-24

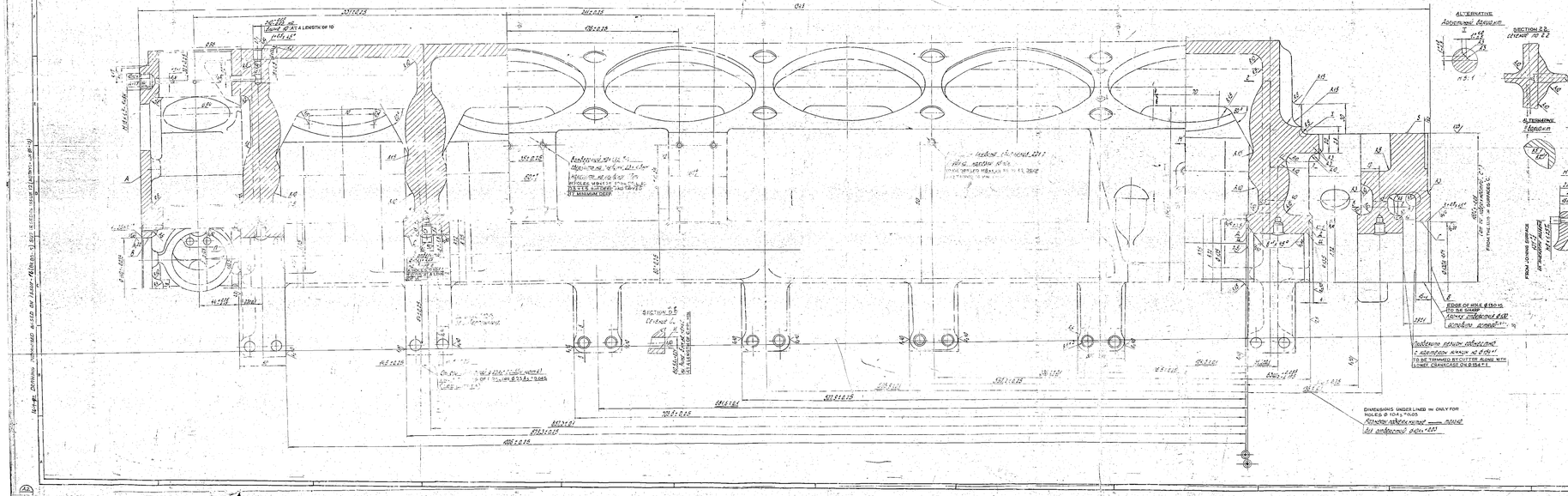

Requirements for castings in compliance with ITA 27-75.
Coating: bakelite lacquer-A.G.E 12-12 for internal and external unmachined surfaces. Permitted is coating of heated spaces roughness of unmachined surfaces 100μ; corresponds to the standard pressure test of water spaces of crankcase, to carried out under pressure of 2,5 to 3 kg/cm² at a temperature of 70 to 80C for 4 minutes before bakelizing and after plugging of auxiliary holes in crankcase area.
Dimensions without tolerances are carried out as per accuracy class 7 GST 1810.
Dimensions without tolerances for casting are carried out as follows:
Up to 300mm with accuracy of ± 1,0
between 300 to 600 with accuracy of ±1,5
Beyond 500 with accuracy of ±
Casting wall thickness, note that is to be processed with accuracy of ±1,5 and more than 10mm with accuracy of ± 2,0 mm.
The shift of position of walls and axes of bosses for studs, fastening the cylinder jacket and main bearing covers should not exceed 2mm. Unspecified casting radii should be 3 to 5mm.
Non-squareness of surface 14 with the axis of thread should not exceed 0,1mm (see sheet 2, section BB).
Non-squareness of axes of threaded holes marked "Ø" with the end faces on Ø10mm should not exceed 0,1mm. Unevenness of surfaces and face no Ø10 should not exceed 0,1mm.
Final machining of surfaces A,B,F,K,M,N,U, should be carried out on sub-assembly.
Share edges are to be bleated.
Dimensions of chamfers without tolerances may be carried out with accuracy of ± 0,3mm for chamfers of axis lens and ± 0,5mm for chamfers over 1mm.
Technical requirements for Brewing on per standard 8201-00.

Mean diameter of thread
18x1 to 14,350 +0,08 -0,05 mm.
M24x1,25 to 1,168 +0,050 -0,050
M24x1,5 to 1,026 +0,050 -0,050 mm.

thread tapering GOST 10549-63, the chamfers of thread of holes are to be countersunk upto the major diameter of thread with an angle of 120.
Surface finish of holes Ø84 for tapplet bolts should correspond to the standard.
Non-squareness of surface "D" on Ø84 and surface Z on Ø58 relatively axes of corresponding threaded holes is not to exceed 0,1mm.
Shift of the axes of holes from the true position should not more than 0,2mm; Datum hole y.
Dimensions given in square brackets are to be machined along with the lower crankcase.

I. Fuel pump brackets attachment places.

Surface P and surface "T" should be parallel to within 0,04mm at a length of 100mm.
Max flatness of surface "P" should not be more than 0,05mm.
Shift of Commaxes between holes Ø and axis of hole A (sheet 2) relative to the axis of surface Z (sheet 1) should correspond with the axis of hole in the fuel pump housing.

II. Holes for drives (sheet 3).

Non-squareness of axes of surfaces J and O relative to the axis of surface "C" (sheet 1) should not be more than 0,05 mm at a length of 100 mm.
Misalignment of surfaces J is not to be more than 0,01mm (to be ensured by machining).
Misalignment of surfaces O is not to exceed 0,02mm (to be ensured by machining).
Shift of axes of surfaces J relative to the axis of surfaces O is not to be more than 0,1mm

Unevenness of axes of surfaces J relative to the axis of surfaces J is not to be more than 0,04mm at a length of 300mm.
Shift of intersection point of axes of surfaces J from the axis of surfaces J is not to be more than 0,02mm.
Shift of axis of surfaces O relative to the axis of surfaces O is not to be more than 0,1mm.
Shift of axis of surfaces J relative to the axis of surfaces O is not to be more than 0,1mm.
Non-squareness of surface "T" relative to the axis of surfaces O is not to be more than 0,02mm on 100mm.
Non-squareness of surface R relative to the axis of surfaces O is not to be more than 0,04mm, at a length of 0mm.
Surface for dynamo-drive flanges and vertical drive sleeve are to be checked by blueing.
Fixed brackets should be evenly spaced along the of the surface, studs.

III. Brackets for dynamo.

Axis of surfaces "B" and axis of surfaces "C" should be parallel to within 0,1mm at a length of 200mm.
Shift of axis of surface B relative to the axis of surfaces hole not to be more than 0,1mm.
Misalignment of surfaces B is not to be more than 0,03mm.

IV. Surfaces for Blocks (sheet 4).

Non-squareness of surfaces "K" with the axes of surfaces "X" not to be more than 0,05mm at a length of 100mm.
Surfaces "K" and the axis of surfaces "C" should be parallel within 0,15mm at a length of 100mm.
Backlash of surface "K" is not to exceed 0,1mm.
While warping of surface "K" is not to be more than 0,03mm.

V. Clip and installfurnace, threaded holes for retaining studs.

Non-parallelism of surfaces "E" should not exceed 0,02mm at a length of 70mm.
Non-squareness of surface "E" with surfaces "D" should not exceed 0,02mm at a length of 70mm.
Shift of surfaces "D" relative to surface "L" is not to be more than 0,1mm.
Surfaces "L" and "D" should be parallel to within 0,2mm at a length of 100mm.
Surfaces "R" should be parallel to within 0,05mm at a length of 0mm.
Backlash of surface "L" is not to exceed 0,1mm.
Non-squareness of axes of threaded holes M20x2mm and M24x2mm should and exceed 0,2mm at a length of 100mm.
Dressed dents and sticks are allowed on supporting surfaces.

VI. Surface for blower.

Surface "S" (sheet 1) should be parallel to the axis of surfaces "X" to within 0,02mm at a length of 100mm.
Non-squareness of surface "L" (sheet 2) with the axis of surface "C" is not to exceed 0,05mm at a length of 200mm in horizontal direction.
Variation in flatness of surface "S" is not to be more than 0,02mm (Feeler 0,0mm should not enter).
Shift of the axes of holes Ø158 Mg from the axis of surfaces "C" is not to exceed 0,2mm.
Misalignment of holes Ø158 Mg should not exceed 0,2mm.

CONTINUED

Material should be marked to place "A" in compliance with GOST 2177-70 by casting, type 12 GOST 2930-62. Punch marking is allowed.
Fits matching of surfaces "H" is not to exceed 0,2mm (qualified tolerance) relative to their common axis.
For top view and dimensions see sheet 2.
For view on the sides of drives see sheet 3.
For view on the front end see sheet 4.
For bottom view see sheet 5.
For view on surface for cylinder blocks see sheet 6.
Painting up to place Ll is allowed.
*Dimensions for reference.
**Dimensions are to be ensured by machining.
Ensure extension of hole U, to surface S.

(1) IS PERMITTED TO CONDUCT A TIGHTNESS TEST FOR CASTINGS BY AIR IN WATER UNDER A PRESSURE OF 2,2 Kg/cm (1 kg/cm²) AND LEAKAGE IS NOT PERMITTED.

(2) CHECK BY TOOL ALONG DIMENSION 10 (SHEET 2), Ø1, X1, Ø, Ø SHEET 4)

FILET SAMPLE SHALL BE APPROVED BY A H S F BEFORE BULK PRODUCTION.

EST. MASS 105 kg	FIG NO STAMPED ON MARKED WHERE INDICATED THUS: T
DO NOT SCALE THIS DRAWING	LETTERS
UNLESS OTHERWISE STATED FINISHED CORNERS TO HAVE A RADIUS OF 3	MORE CLEARLY FINISHED CORNERS ARE PERMISSIBLE

DRN		MATERIAL	DWG NO
CHK		A.A.G GOST 2685-75	CS 3301-15-17
APPD			
ARMY		CENTRALLEVAT OF QUALITY ASSURANCEMENT VEHICLES	
NAVY			
AIR FORCE			
DIMENSIONS IN mm			
UNLESS OTHERWISE STATED			
SCALE 1:1		CRANK CASE UPPER	
STATUS: O, PRO-TOTYPE, S, SERIES			
TOLERANCE:			
CONTROL NO			3301-16-24
			SHEET 1 OF 6

1		1	
2		2	
3		3	
4		4	
5		5	
6		6	
7		7	
8		8	
9		9	
10		10	
11		11	
12		12	
13		13	
14		14	
15		15	
16		16	
17		17	
18		18	
19		19	
20		20	
21		21	
22		22	
23		23	
24		24	
25		25	
26		26	
27		27	
28		28	
29		29	
30		30	
31		31	
32		32	
33		33	
34		34	
35		35	
36		36	
37		37	
38		38	
39		39	
40		40	
41		41	
42		42	
43		43	
44		44	
45		45	
46		46	
47		47	
48		48	
49		49	
50		50	

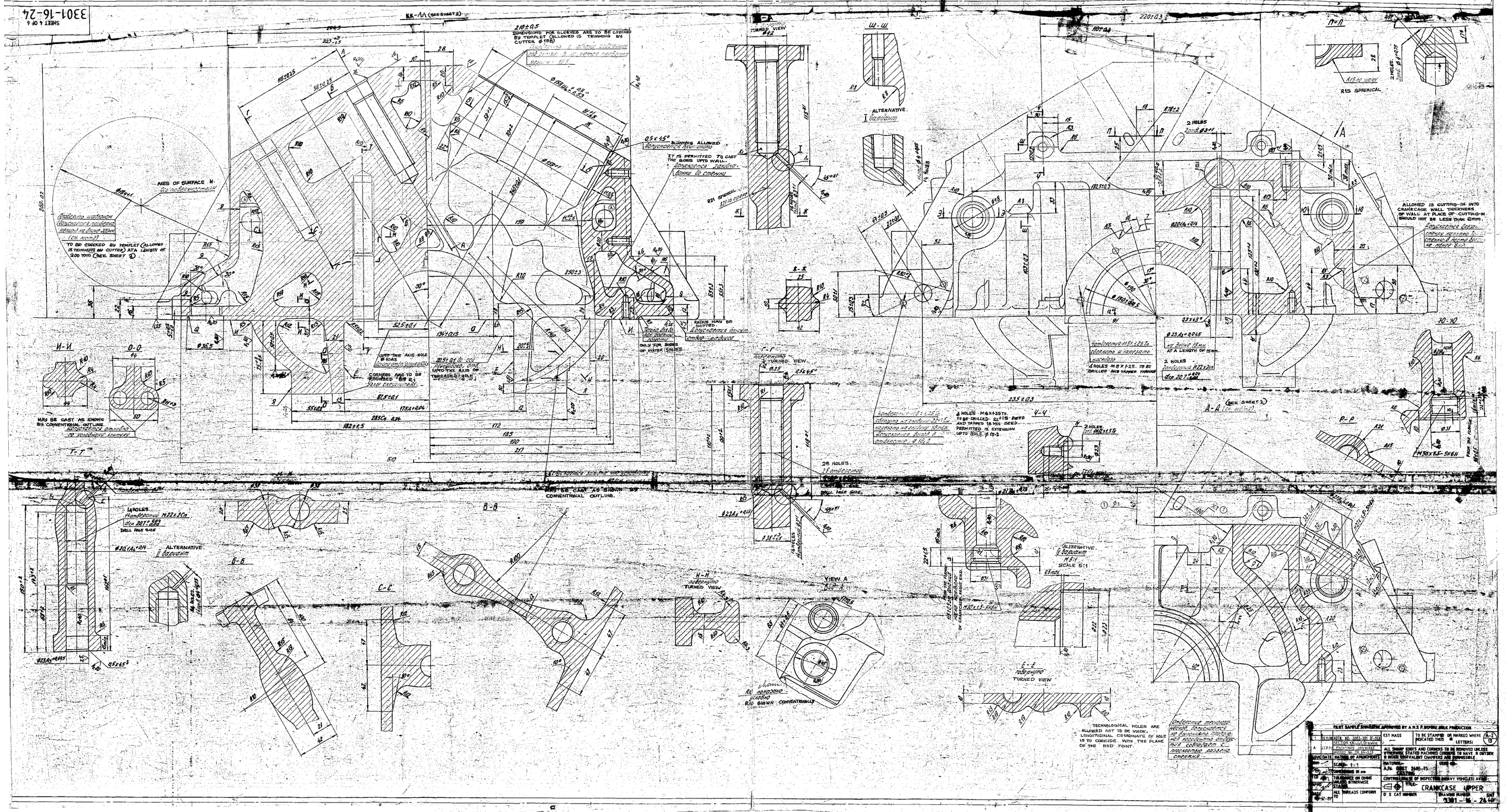
KK-AA (SEE SHEET 2)
DIMENSIONS FOR SLEEVES ARE TO BE CHECKED BY TEMPLET (ALLOWED IS TRIMMING BY CUTTER ø198)
0.5x45° BLUNTING ALLOWED
IT IS PERMITTED TO CAST THE BOSS UPTO WALL.
AXES OF SURFACE H.
TO BE CHECKED BY TEMPLET (ALLOWED IS TRIMMING BY CUTTER) AT A LENGTH OF 200 MM (SEE SHEET 2)
RADIUS MAY BE CUTTER.
ONLY FOR BOSSES OF WATER SPACES
UPTO THE AXIS HOLE ø 60AS
CORNERS ARE TO BE ROUNDED R6 ±1.
MAY BE CAST AS SHOWN BY CONVENTIONAL OUTLINE.
TURNED VIEW
ALTERNATIVE
R15 SPHERICAL
2 HOLES
ALLOWED IS CUTTING-IN INTO CRANKCASE WALL THICKNESS OF WALL AT PLACE OF CUTTING-IN SHOULD NOT BE LESS THAN 6mm.
4 HOLES M8X1.25. TO BE DRILLED AND TAPPED THROUGH
2 HOLES
4 HOLES M8X1.25. TO BE DRILLED AND TAPPED 18 MM DEEP. PERMITTED IS EXTENSION UPTO HOLE ø 15±1.
28 HOLES
14 HOLES
ALTERNATIVE
SCALE 5:1
VIEW A
TECHNOLOGICAL HOLES ARE ALLOWED NOT TO BE MADE. LONGITUDINAL COORDINATE OF HOLE IS TO COINCIDE WITH THE PLANE OF THE ROD JOINT.
PILOT SAMPLE SHOULD BE APPROVED BY A.N.S.P. BEFORE MASS PRODUCTION
ALL SHARP EDGES AND CORNERS TO BE REMOVED UNLESS OTHERWISE STATED MACHINED CORNERS TO HAVE .5 OUTSIDE & MORE EQUIVALENT CHAMFERS AND REMOVABLE
MATERIAL:
A24 GOST 2685-75
CASTING
CONTROLLING OF INSPECTION (ABOVE VEHICLES) AVAILABLE
CRANKCASE UPPER
3301-16-24
ALL THREADS CONFORM TO
D S CAT NUMBER

I – ANCHOR STUDS

СБ 3301-15-17

Interference on threads of studs should be ensured by means of selection.

Non-squareness of the axes of the cylinder block fastening studs with surface 'Ж' at a length of 300 mm should not exceed 1.0 mm.

Non-squareness of the axes of the bearing studs with surface 'O' should not exceed 0.2 mm a length of 120mm.

Bending of studs during assembly is not allowed.

After installation of studs, 44 holes of Ø 3 mm for letting air out may be caulked.

II- JOINT SURFACES, END FACES AND HOLES ON END FACES

Non-fitting of joint surfaces (after installation of studs) as a result of buckling should not exceed 0.35 mm as far as the clearance is concerned.

Non-fitting as a result of local cavities or bulging is not permitted.

Non-squareness of surface 'A' with the axis of surface 'C' should not exceed 0.03 mm on Ø 120 mm.

Non-squareness of surface 'B' with the axis of surface 'C' should not exceed 0.04 mm on Ø 160.

Misalignment of surface 'B' and 'Г' with the axis of surface 'C' is not more than 0.03 mm.

Misalignment of surfaces 'B' and 'Г' with the axis of surface 'K' should not exceed 0.03 mm (to be ensured by tool).

After tightening by 8 nuts from the face side a feeler gauge of 0.05 mm should not enter at the flange on the transmission side.

It is permitted to give a step between surfaces A and Ц with the protrusion of surface Ч 1 mm maximum on Ø 215H16(+2,9)

Sinkage/projection of surface 'Г' relative to surface Ц is allowed max 1.1 mm.

III BEARING COVER AND SURFACES UNDER SHELLS

The sinkage of bearing caps in the rings (as per width) should not exceed 1.1 mm on the side gear box and should not exceed 1 mm on the side of the front end.

The projection of bearing caps from the ring (as per width) should not exceed 0.5 mm on the side of gear box and should not exceed 0.8 mm on the side of the front end.

Covers of bearing as per surface 'O' is checked by bluing. Contact should be minimum 90% of surface. Non-contact is not allowed. Checking is carried out visual by QID but not less than 5 % crank cases.

Surfaces C1, П1, Д1, П pre finished after tightening of cover bolt of bearings as per instruction ИВ – 27-5Д.

Misalignment of surface 'C' according to all supports should not exceed 0.01 mm (ensured by machining process).

Shift of axis of surfaces 'C' relative to surface 'O' should not exceed 0.1 mm.

Skewness of axis of surface 'C' relative to surface 'O' should not exceed 0.1 mm at a length of 1050 mm.

Non-squareness of surface 'Д' with the axis of surfaces 'C' should not exceed 0.05 mm on 120 mm diameter.

Non-squareness of surface 'П' with the axis of surface 'C' should not exceed 0.03 mm on Ø 120 mm.

When boring the surfaces for shells and shell surfaces, tighten the studs, fastening the bearing caps and tightening studs in accordance with instruction ИВ – 27-5Д.

IV HOLES FOR TRANSMISSION ITEMS

Mutual shift of the axes of surfaces Н, У and Ю should not exceed 0.1 mm.

Non-squareness of axes of surface Н, У and Ю with the axis of surface 'C' should not exceed 0.05 mm at a length of 100mm.

Shift of axes of surfaces Н, У and Ю from the axis of surface 'K' should not exceed 0.05 mm.

Misalignment of surfaces Щ and Ш should not exceed 0.03 mm (dependent tolerance).

Shift of axis of surface Ш from the axis surface Н should not exceed 0,08 mm.

Non-parallelism of the axis of surface Щ with surface 'Н' should not exceed 0.05 mm at a length of 200 mm.

Non-squareness of surfaces М with axes of surface 'Э' and 'Ш' should be checked by bluing. The imprint should cover the whole ring on a width not less than the size width with gaps not exceeding 4 mm.

Non-squareness of the axes of surfaces 'Э' and 'Т' with surface Ф should not exceed 0.05 mm on diameter 50 mm. Non-squareness of axes of surfaces Щ and Ш with surface Ф should not exceed 0.07 mm on diameter 70 mm.

The distance between axes of surfaces 'Э' , 'Т" and 'Ш" should be maintained within $52.5^{+0.15}_{-0.05}$ mm

Misalignment of axis of boring on brackets for fuel pump 'P' on the crank case and axis of hole 'X' in the fuel pump drive housing should not exceed 0.08 mm at a distance of 180mm from the axis of hole Y.

V BEARING SHELLS

Shift of end faces of shells when the upper shell protrudes towards the transmission should not exceed 0.9 mm. When the upper shell protrudes towards the front end the shift should not exceed 0.7 mm. In case of displacement of end faces the coated supporting surfaces are to be aligned with a scraper.

Machining of surface 'K' and checking of bearing fitting to surface 'C' should be carried out as per instruction ИВ 27-5Д with being studs tightened.

The fitting of bearing shells to surface 'C' is to be checked by bluing. The imprint should cover an area of not less than 80% of the shell surface. The imprint should be even. Checking should be done on 10% of the units.

Misalignment of surfaces 'K' on all the supports should not exceed 0.01 mm (to be ensured by technological process).

Conicity of surface 'K' should not exceed 0,01 mm at a length of 40 mm.

Ovality of surface 'K' should not exceed 0.015mm.

Convexity of surface 'K' should not exceed 0.01 mm. Concavity of surface 'K' is not allowed.

Variation in thickness of shell (steel + bronze) should not exceed 0.1 mm. The surface of casting should be in compliance with TTM 43-87.

Projection of end faces of 1st support bearing shells should not exceed 0.2 mm beyond surface 'П'.

Projection or sinking of end face of bearing should not exceed 0.4 mm relative to surface 'O'.

On surface 'K' of bearing shells of 6th, 7th and 8th supports (before lead plating) insignificant longitudinal marks are allowed with subsequent finishing.

Non squareness of surface 'E' with the axis of surface "K" should not exceed 0.04 mm on Ø120 mm.

It is allowed to install bearing shells 501-82-1, 501-83-1 instead of shells 3301-85-4A, 3301-88-4A. The crank case number to be punched at place 'A' on upper and lower thrust bearing shells

VI

when replacing the lower crankcase, a tight fitting bolt Ø9.5 may be installed.

Non-squareness of the axes of fastening studs with the surface, they are screwed in, should not exceed 0.2mm on a length of 40 mm.

The studs with unspecified individual tolerance on projection are to be screwed in with tolerance ±1.0 mm.

The dowels are to be installed with a tolerance on height ±0.5 mm.

After installing bushes 301-106-1, 306-129 and 402-28-1 in crankcase, the thread in them may be checked with a gauge.

It is permitted to install studs 301-18-15 and 301-18-3 on the left side (if viewed from transmission) with a decrease of diameter $23ш\left(^{-0.06}_{-0.095}\right)$upto 20 h16(-1.3)mm.

It is allowed to install tight-fitting bolts with their heads facing the upper crank case.

Water spaces of upper and lower crankcase should be pressure-tested with water having the temperature of 70 to 80° at a pressure of 2.5 to 5 kg/cm² for 4 minutes. No leakage is permitted.

The studs which are to be screwed into the threaded holes leading to the inner space of the crankcase fix an anaerobic – anatomist – 5 МД Ту 2257-339-00208947 – 2000 as per instruction НЛ - 652-86.

Plugging of auxiliary holes in lugs as per sketch A is permissible.

On one face of hold-down nut the cadmium coating may be removed locally for putting the pairing number by electro graph.

The finish of the holes for tight-fitting bolts Ø9A should be as per standard.

Studs 350-15 and 350-40-1 may be installed heads facing the upper crank case on glue No 1 cold consolidate as per instruction НА 745-88.

After mounting bushes 301-106-1, 301-33-1, 301-33-2 and 402-28-1 the bushes may be faced to depth of $0.2^{+0.3}$ with surface finish 2.5√.

The lower crankcase may be dressed in section 'A' designated with dash and dot line (see view along arrow Д) so as to ensure clearance between the lower crankcase and the ring of the upper crank case. After dressing the thickness of the wall should not be less than 4 mm.

The oil pump fastening studs are to be tightened upto termination of thread.

When manufacturing the item as spare part surface K and E should not be machined. Dimension Д1 is maintained from axis to surface 'C'. It is allowed to carry out the checking by cutter as per dimension B1 jointly with lower crankcase on Ø B1.

For assembly units in tropicalized construction, components having in the list of given drawing in the graph, "Remark" designation "TH" should have tropicalized construction provided drawing for the component.

Bush 301-33-2, plug 401-366, unions Сб 401-363 412-53, Bush 301-106-1 are fixed on sealing compound -anaerobic anatomist – 5 МД Ту 2257-339-00208947-2000 as per instruction НА 652-86.

Alternate material item 74 sewing thread made of natural silk N 13a GOST 22665-83. Fixing of split pin 354-28 is carried out at the final assembly of engine.

PILOT SAMPLE SHOULD BE APPROVED BY A H S P BEFORE BULK PRODUCTION.

EST. WT. (Kg)	TO BE STAMPED OR MARKED WHERE INDICATED THUS # (LETTERS)
—	

ALL SHARP EDGES AND CORNERS TO BE REMOVED UNLESS OTHERWISE STATED MACHINED CORNERS TO HAVE R OUTSIDE R INSIDE EQUIVALENT CHAMFERS ARE PERMISSIBLE.

ISSUE	DATE	NATURE OF AMENDMENTS

DRN	V.Dhanu	MATERIAL :- —
CHD	M.C.Prabhakar	USED ON :- Cb 3301-00-17
APPD	B.Prabhakar	
DATE	17-05-2012	CONTROLLERATE OF QUALITY ASSURANCE (HEAVY VEHICLES) AVADI
SCALE:-		
DIMENSIONS IN mm		TITLE :-
TOLERANCE ON DIMNS UNLESS OTHERWISE STATED IS : 2102 - G9		CRANK CASE
ALL THREADS TO CONFORM TO		D S CAT NUMBER / DRAWING NUMBER Sht.2 of 2 Cb.3301-15-17

DRG. INDIANISED BASED ON RUSSIAN ORIGINAL ISSUE - 64 AND INTRODUCED & REPLACES ISSUE - B VIDE 18th IRIGC POINT No 5.

SIZE A1

DRAWING NUMBER
Cb.3301-15-17

SHEET NO. 1 OF 2

DRG. INDIANIZED BASED ON RUSSIAN ORIGINAL SERIE: -9 AND
DRG REPLACES: ISSUE 8 VIDE 18th ISUE POINT No. 5

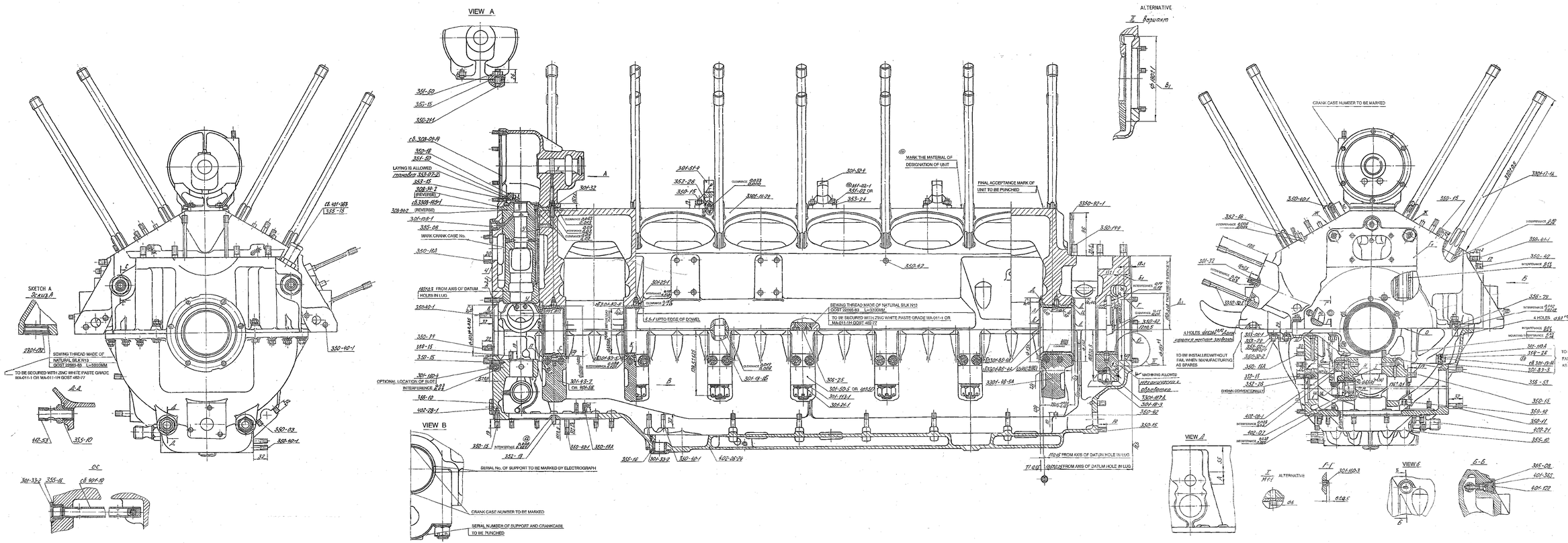

TILOT SAMPLE SHOULD BE APPROVED BY A.I.S.P BEFORE BULK PRODUCTION.

RST, WT, Rkg	TO BE STAMPED OR MARKED WHERE INDICATED THUS # (LETTERS)
ALL SHARP EDGES AND CORNERS TO BE REMOVED UNLESS OTHERWISE STATED. MACHINED CORNERS TO HAVE 3 - OCT-RDM. & FINISH EQUIVALENT GRAPHICS ARE PERMISSIBLE.	

MIN	
CHD	
APPD	
DATE	14-05-2012
SCALE: 1:2	
DIMENSION IN mm	
TOLERANCE ON DIMNS UNLESS OTHERWISE STATED IN: IS:2102-69	
ALL THREADS TO CONFORM TO	

ISSUE	DATE	NATURE OF AMENDMENTS

MATERIAL : —

USED ON : Cb.3301-20-17

CONTROLLERATE OF QUALITY ASSURANCE (HEAVY VEHICLES) AVADI

TITLE:- CRANK CASE

N.S. CAT NUMBER

DRAWING NUMBER: SH 1 OF 2
Cb.3301-15-17

F.160

SIZE A1x3

DRAWING NUMBER
Cb.3301-15-44

SHEET No. 1 OF 1

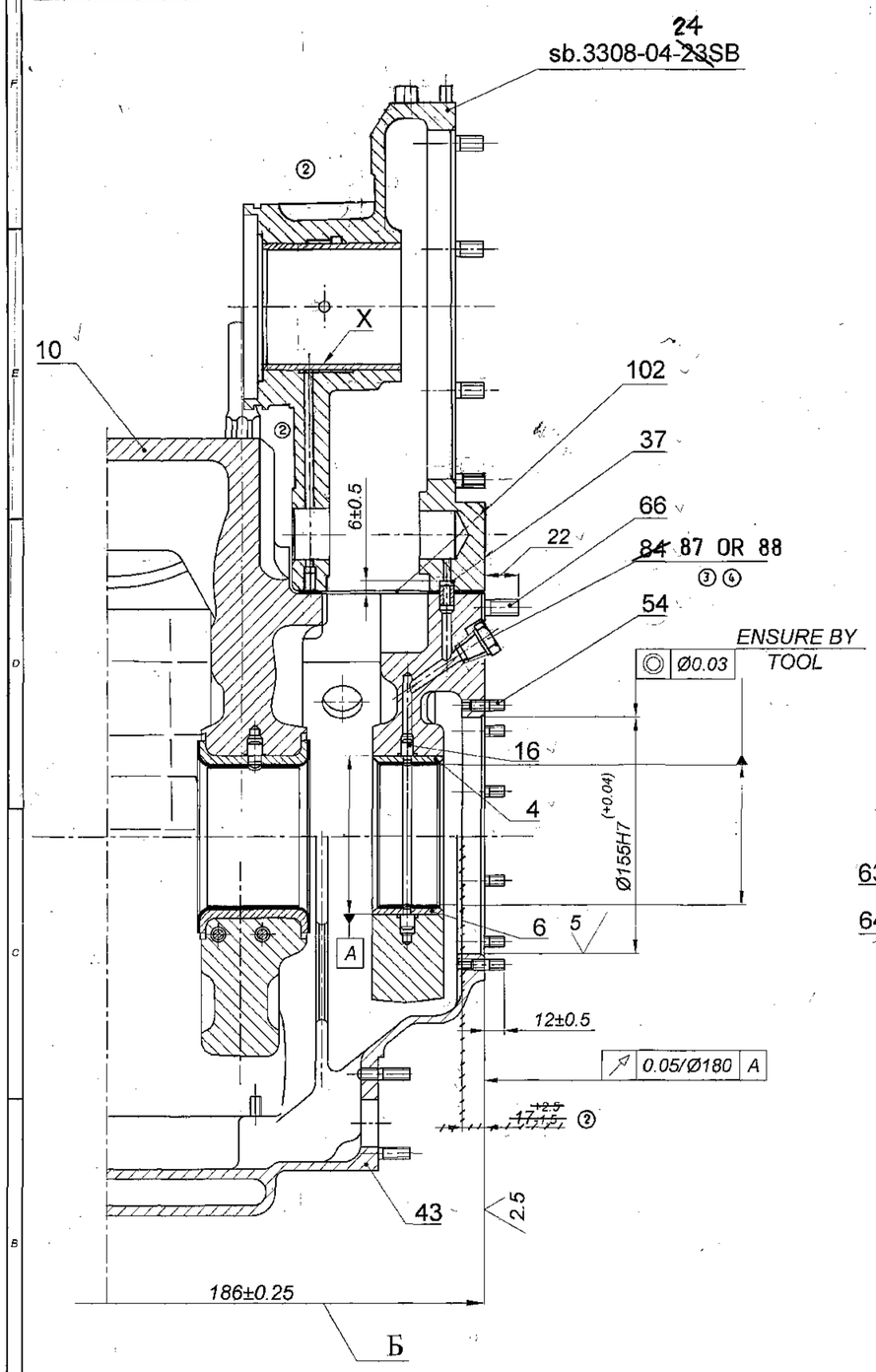

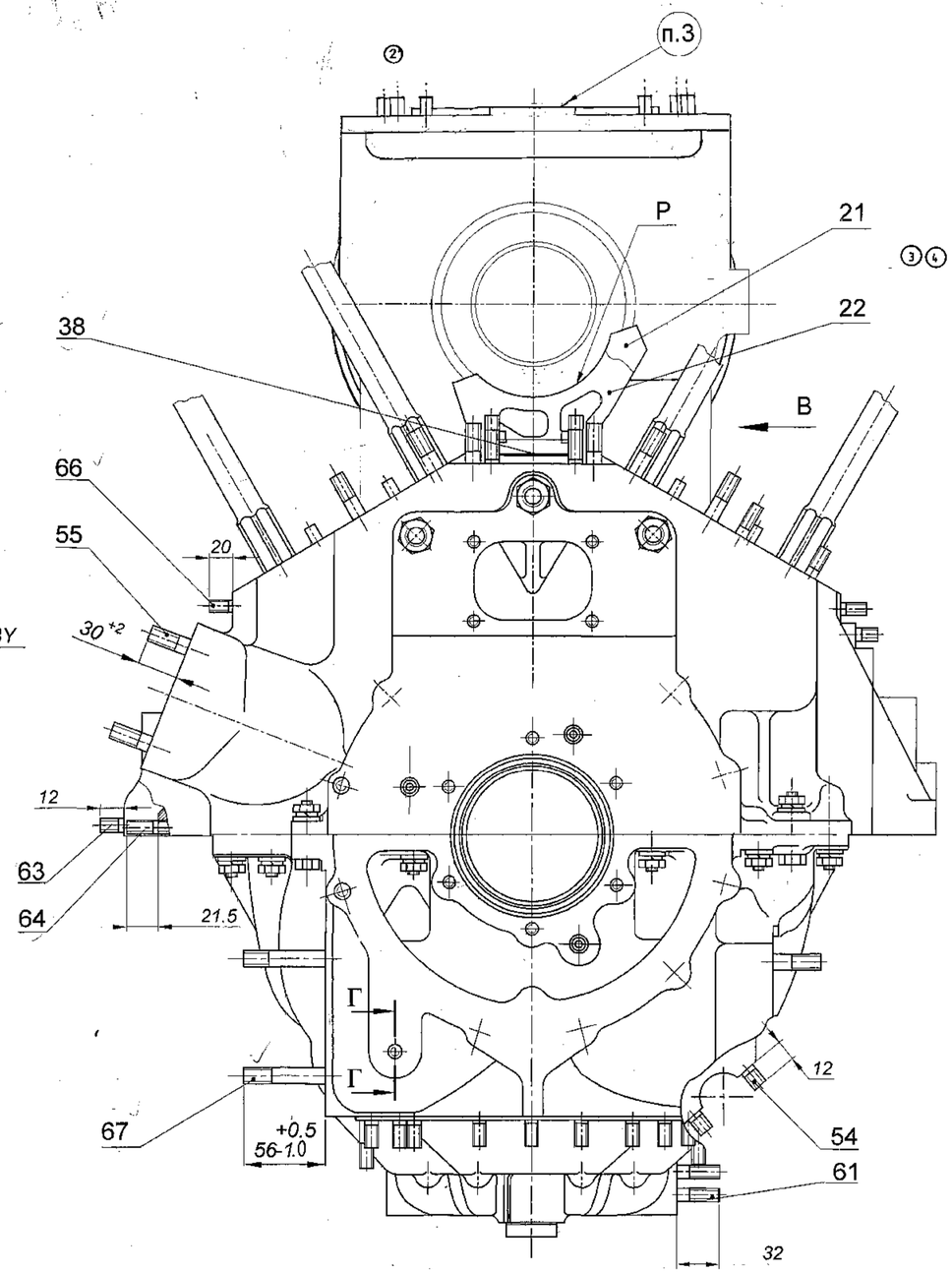

1.Dimension 'Б' from the datum line of holes should be from one point.
2. Alignment allowance of surface "P" and holes "X" should be 0.08 mm at a length of 180 mm. Ensure the alignment by placing the gasket item 38 under the FIP bracket
3.Stamp the crank-case number with letter type 5-Пр3 GOST 26.008-85
4. Put the component (~~item 84~~ item 87, 88) by using sealing compound АН-5МД ТУ 6-01-1288-84 as per instruction ИП-652-86.
5.The remaining views,items,Technical requirements and machining should be as per Assembly units Sb.3301-15-17.

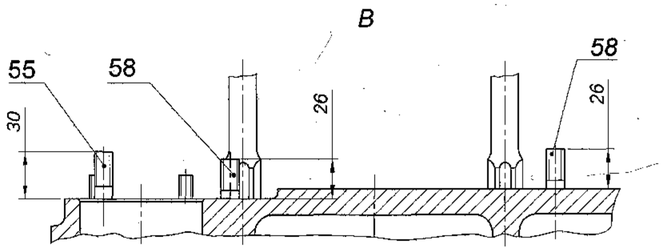

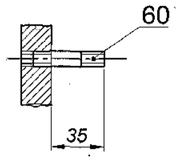

PILOT SAMPLE SHOULD BE APPROVED BY A H S P BEFORE BULK PRODUCTION.

EST. WT.	TO BE STAMPED OR MARKED WHERE INDICATED THUS # (LETTERS)

ALL SHARP EDGES AND CORNERS TO BE REMOVED UNLESS OTHERWISE STATED MACHINED CORNERS TO HAVE R OUT-SIDE R INSIDE EQUIVALENT CHAMFERS ARE PERMISSIBLE.

ISSUE	DATE	NATURE OF AMENDMENTS
4	07-01-10	NOTN. No. 288-08
3	07.01.10	NOTN. No. 2001-375
2	26-2-09	NOTN. No 234-06 (F-158)

DRN	
CHD	
APPD	
DATE	28.8.07
SCALE:-	1:2
DIMENSIONS IN mm	
TOLERANCE ON DIMNS UNLESS OTHERWISE STATED IS : 2102-69	
ALL THREADS TO CONFORM TO	
D S CAT NUMBER	

MATERIAL :- ——

USED ON :- GENERAL ASSY (T-90)

CONTROLLERATE OF QUALITY ASSURANCE (HEAVY VEHICLES) AVADI

TITLE :- **CRANK-CASE ASSY**

DRAWING NUMBER **Cb.3301-15-44**

DRG. INDIANISED BASED ON RUSSIAN ORIGINAL ISSUE-1

F-3 12/166

SIZE A1