ASHOK LEYLAND

FIRST ANGLE PROJECTION

COMPUTERISED DRAWING
DO NOT CHANGE MANUALLY

#.1

DYNAMOMETER TEST RESULTS OF RAF-7 ASBESTOS FREE LINERS									
DYNAMOMETER DETAILS	AVERAGE BRAKE TORQUE MATRIX IN KG-M								
INERTIA: 113 KG-M SEC^2	LINE PRESSURE IN BAR								
	SPEED (KMPH)	2	3	4	5	6	7	8	% Pr. FADE
ROLLING RAD: 0.508 M	35	388	542	652	801	937	1051	1214	23
	50	393	559	736	873	1012	1144	1220	22
	65	459	653	863	1026	1165	1342	1493	19
BRAKE CHAMBER: TYPE 27/24	80	434	690	920	1085	1292	1501	1552	16
	95	418	652	828	1010	1267	1456	1491	14
SLACK LENGTH: 160 MM	110	458	676	850	1065	1191	1206	1396	25
	% SPEED FADE	15	21	29	26	27	30	22	
BRAKE TORQUE VALUES WHEN CHECKED ON DYNAMOMETER SHOULD LIE WITHIN ±12%									

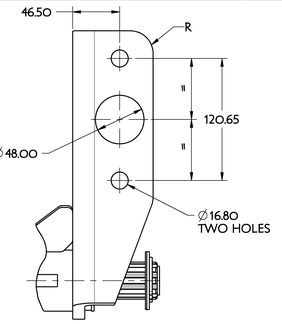

CHAMBER MOUNTING DETAILS

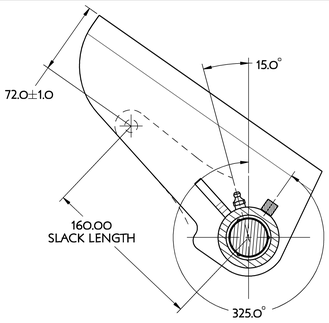

SECTION C-C

S.R.C.

SIM.PARTS	LAYOUT NO. QC-1557-067/068

INTERPRET DRAWING PER A.O. ENG. STDS. DRW.
UNLESS OTHERWISE SPECIFIED:
ALL DIMENSIONS IN MILLIMETERS.
CASTING TOLERANCES PER A.O. DRW STD Z-001-2
FORGING TOLERANCES +1.0-0.8 DRAFTS 1°&1°
OTHERWISE TOLS.±0.40 ON 2-PLACE DECIMALS
±0.80 ON 1-PLACE DECIMALS
±1°ON ANGULAR DIMENSIONS
ALL MACHINED INSIDE CORNERS 0.80 RADIUS.
BREAK ALL SHARP EDGES.
REMOVE ALL BURRS,FINS,FLASH & PROJECTIONS.

FINISH ALLOWANCE
F1 : 0.8
F2 : 1.6
F3 : 2.4
F4 : 3.2
F5 : 4.0
F6 : 4.8
F8 : 6.4
F10 : 8.0

REVISIONS

R1	RELEASED FOR AL APPROVAL	01-Jun-09	KSC GK
R2	AL PART NO ADDED AS PER APPROVED DRAWING	EP001291 17-Jun-09	KSC GK
R3	RELEASED FOR PRODUCTION	ER001336 08-Dec-09	KSC GK
R4	CAMSHAFT & BRACKET TUBE LENGTH INCREASED BY 10 MM AS PER AL REQUEST VIDE MAIL	07-Jan-10	KSC GK
R5	P/N QC-1557-109/110 ADDED, DIM 'A', 'B', 'C' & 'D' TABULATED AS PER AL REQUEST VIDE MAIL	16-Feb-10	KSC GK
R6	CUSTOMER P/N ADDED	EP001515 08-July-10	RJS GK
R7	BIMETAL BUSH TO P/N 1225-M-C039 WAS BRONZE BUSH TO P/N 1225-E-C005	EC003616 27-May-2011	RJS GK

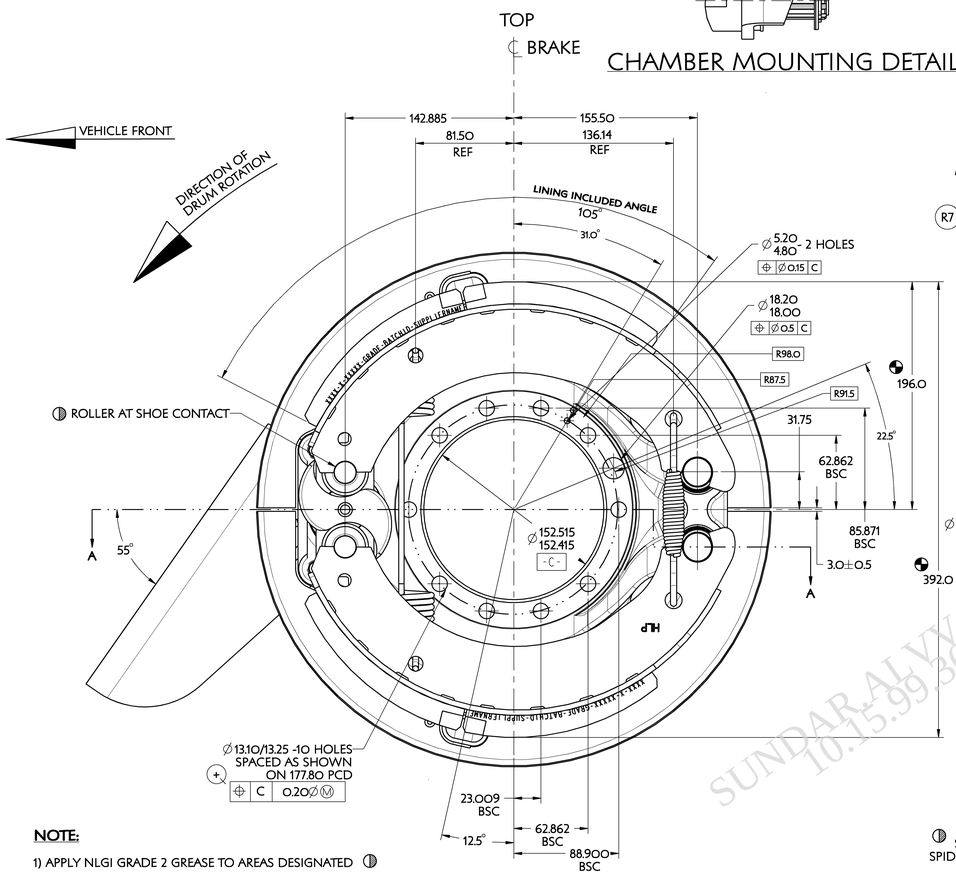

BRAKE ASSY
LH (SHOWN)

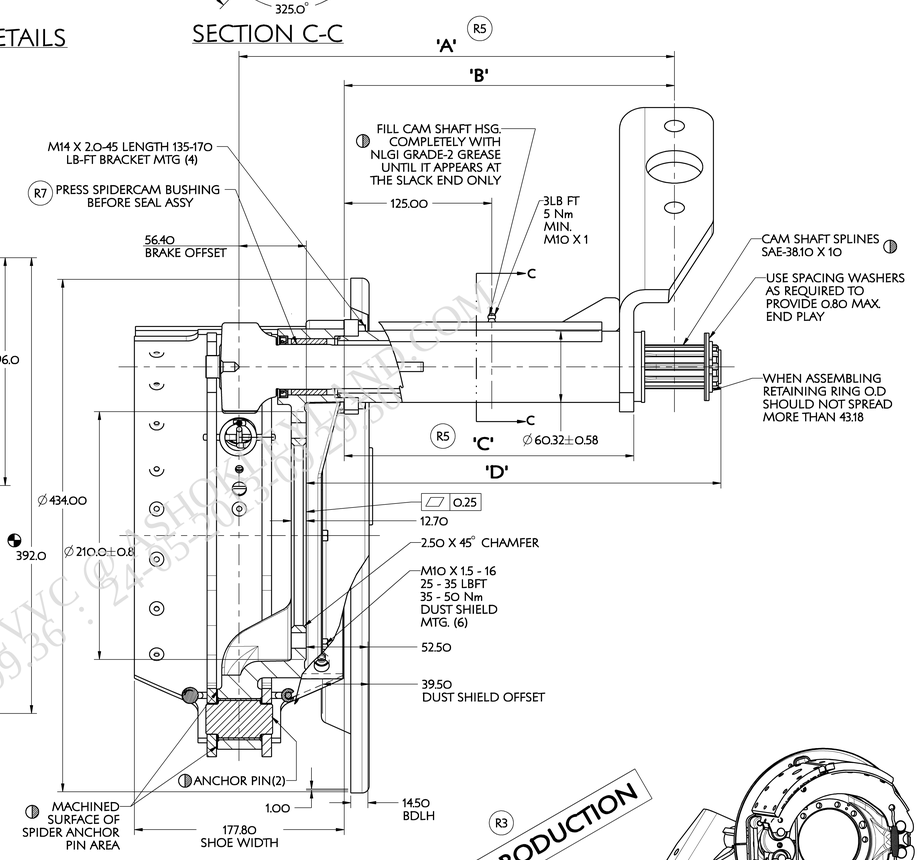

SECTION A-A

FOR PRODUCTION

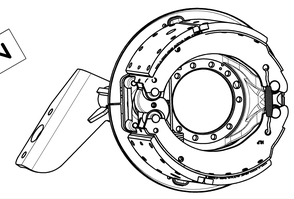

R3

R6

R5	361.0	255.3	290.0	379.0	RANE RAF-7 (ASBESTOS FREE)	BASIC BRAKE ASSY LESS CHAMBER & SLACK ADJUSTER	F3P10500		QC-1557-110	OPPOSITE RH				
							F3P10400		QC-1557-109	SHOWN LH				
R2	351.0	245.3	280.0	369.0			F3P03600		QC-1557-098	OPPOSITE RH				
							F3P03500		QC-1557-097	SHOWN LH				
	'D'	'C'	'B'	'A'	BRAKE LINING	REMARKS	A/L PART NUMBER	RELEASE	NAME BRAKE ASSEMBLY	ENG.DESC. CODE				

APPLY SPECIFIED MERITOR MARKINGS PER A.O. ENGINEERING STANDARD D-004

THIS PRINT IS LOANED ON A CONFIDENTIAL BASIS SUBJECT TO RETURN UPON DEMAND BY MERITOR AND NOTHING HEREON MAY BE REPRODUCED, USED OR DISCLOSED IN WHOLE OR IN PART WITHOUT THE PRIOR WRITTEN PERMISSION OF MERITOR.

MATERIAL
PROCESS
APPROVED: PROJ.ENG | MATERIAL | SPECIAL
DRAWN BY KSC 01-Jun-09
CHECKED BY GK 01-Jun-09
3RD ANGLE PROJECTION
ORIGINAL FOR A/L REAR HLP- ABS 55° BRKT
SCALE NTS
DESIGN CONTROL GROUP BRAKES ENGG- MHVSIL
PART NO.
MERITOR. METRIC
TYPE NO.
OF
4 IN. 10THS.
WEIGHT RGH./FIN. KGS
INQUIRY NO.
C.R./T.E. NO.
APP. NO.

QUALITY SYMBOLS:
Ⓢ SAFETY
Ⓒ CRITICAL
Ⓘ IMPORTANT

NOTE:

WEIGHT OF BRAKE ASSY:=36.5 KGS (APPROX)

BRAKE SETTING DIMENSIONS

NOTE:

1) APPLY NLGI GRADE 2 GREASE TO AREAS DESIGNATED ◑
2) BRAKE RETRACTED (COLLAPSED) DIMENSION 390.0/391.5 (REF)
3) PART NUMBER, GRADE, BATCH ID & SUPPLIERNAME PRINTED ON EDGE OF THE LINER ON BOTH SIDES
4) ON SHOE AND LINING ASSY RUNOUT AND SQUARENESS NOT TO EXCEED 0.6 AND 0.1/25 OF SHOE WIDTH RESPECTIVELY WHEN SUPPORTED ON ANCHOR AND ROLLER SLOTS ON A FIXTURE
5) ROLLER AND CAM CONTACT SURFACE NOT TO BE GREASED
6) PAINT & SURFACE TREATMENT:
PAINT - BLACK COLOR FOR DUST SHIELD, BRCKET- BRAKE CHAMBER, FASTENERS, DUST SHIELD MOUNTING AND BRACKET MOUNTING ONLY & RED OXIDE PRIMER FOR SPIDER AND BRAKE SHOE. EXCEPT FOR MACHINED SURFACES.
SURFACE TREATMENT MUST COMPLY WITH ALS . 268 . 03 CLASS C (FOR EXPOSED PARTS: BRACKET ASSY BRAKE CHAMBER, DUST COVER, BRKT MTG & DUST COVER MTG FASTENERS ONLY)

R8

DO NOT CHANGE MANUALLY

SOLID MODELING CENTER

SUNDAR ALVVC @ ASHOKLEYLAND.COM 10.15.99.36 : 24.85.105.20 : 29.05.2012

QC-1557-097	F3P03500	S03874 08.06.2009		004901 03.12.2009	25		AJS 08.06.2009		AJS 03.12.2009
QC-1557-098	F3P03600								
SUPPLIER PART NO.	AL PART NO.	SAMPLE	TRIAL	PRODUCTION	SAMPLE	TRIAL	SAMPLE	TRIAL	PRODUCTION
PART NO.		ASHOK LEYLAND APPROVAL NO. AND DATE			QUANTITY		APPROVED BY/ DATE		

	F3P03500	Qty : -	Qty : -
Supplier Part No	AL Part No	Sample	Pilot	Production

Ⓒ-CRITICAL Ⓢ-SAFETY Ⓘ-IMPORTANT. THIS DRG.CONTAINS - SAFETY CHARACTERISTICS

UNLESS OTHERWISE SPECIFIED

TOLERANCES	REFER IS:2102 ; MEDIUM FOR MACHINING AND COARSE FOR FABRICATION
SURFACE PROTECTION	FABRICATED COMPONENTS TO BE DEGREASED, DESCALED, APPLY ZINC PHOSPHATE, APPLY EPOXY PRIMER AND APPLY ENAMEL TO MEET 300 HRS OF SALT SPRAY LIFE WHEN TESTED AS PER ASTM B117 (UNDER PELLICULAR CORROSION <= 2mm. NO BLISTERING IS ALLOWED.) MACHINED SURFACE TO BE APPLIED WITH RUST PREVENTIVE OIL TO IS:1154
SURFACE FINISH AS PER IS:3073(CLA VALUE)	METRIC SCREW THREADS SHALL CONFORM TO THE LIMITS AND TOLERANCES SPECIFIED IN THE CURRENT IS:4218 CLASS 6g EXTERNAL OR 5H INTERNAL. / SHARP EDGES TO BE REMOVED DIMENSIONS ARE IN MM DO NOT SCALE DRAWING

SPECIAL INSTRUCTIONS/NOTE:

F3P03500 IS SIMILAR TO F8891400 EXCEPT BRAKE CHAMBER MOUNTING BRACKET ANGLE.

1.CORROSION RESISTANCE TO MEET ALS 268.03 CLASS C.

BILL OF MATERIALS

SL.No.	PART NO.	DESCRIPTION	MATERIAL	QTY.

APPEARANCE ITEM	ER-DIN	DATE
YES / NO	ER-DIN-0002906	22.05.2009
FINISHED WEIGHT(APPROX) 36.5 Kgs	REF.PT.NO.	F8891400
	S/A.PT.NO.	
SCALE NTS	SUPERSEDES	
	SPEC.NO.	

ALTERATIONS	ER-DIN DATE	GRADE	SUFFIX
SUPPLIER DRAWING UPDATED FIRST ANGLE PROJECTION STRIKED OFF, REMARKS EDITED. SUPPLIER APPROVAL NO ADDED FOR STAGE 3 SD/MBM/AJS	ER-DIN-0004196 03.12.2009		#.1
SUPPLIER DRAWING UPDATED WITH SALT SPRAY NOTE. AAG/MN/RV	ER-DIN-9504 27.03.2012		A

AL PLM VAULT

REVISION : A DATE : 29/3/2012 STATUS : RELEASE
STAGE : III ER-DIN NO : ER-DIN-0009504 DATE : 29/3/2012
ALTERED BY : nachiappan.m CHECKED BY : vedhanayagam.s
MED APPROVAL : visu.alvvc APPROVED BY : ajs.alvvc

DIGITALLY SIGNED . PHYSICAL SIGNATURE NOT REQUIRED

DRAWN/ DATE	CHECKED/ DATE	MED APPROVAL/ DATE	APPROVED/ DATE	STDS APP/ DATE
SD 08.06.2009	MBM 08.06.2009	XXXX XX.XX.XXXX	AJS 08.06.2009	

MATERIAL

HEAT TREATMENT

REMARKS
WITH 55 DEGREE BC MTG BRACKET - FOR TIPPERS #.1

DESCRIPTION
15.5"X7" HLP RAF7 ABS REAR BRAKE - LH

PART NO. F 3 P 0 3 5 0 0 A

SHEET NO 1 OF 1 A0

ASHOK LEYLAND LTD.
TECHNICAL CENTRE, VELLIVOYAL CHAVADI

This design is strictly private and confidential. It is the exclusive property of Ashok Leyland Ltd., and must not be used, copied or reproduced in part or whole without the company's written permission.