DRAWING No. 8603 03 02 01 01 005 00PA

GEN TOL. MEDIUM CLASS TO IS:2102

DRAWING CONVENTIONS CONFORM TO INDIAN STD. DIMN. IN mm UNLESS OTHERWISE STATED.

NOTE : BEFORE MANUFACTURING, FOR QA & QC REFER QUALITY ASSURANCE PLAN (SPECIFICATION NO. ARDE/PINAKA/SPECN & QAP/WH-03, Issue : 1.0, Rev No : 4)

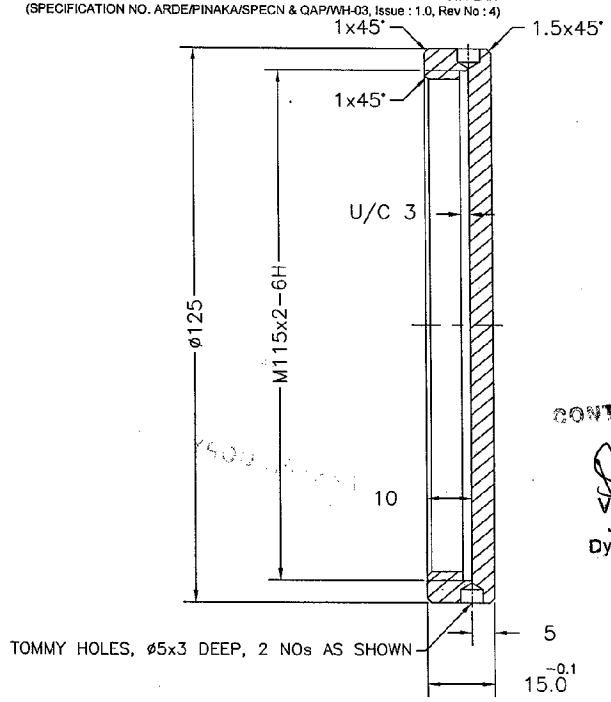

CONTROL COPY No. 3

V S KARKHANIS
Jr. Tech Officer
Dy Asstt. Controller

CQA (AMN) KHADKI

R. No.	DATE	AUTHORITY	BRIEF RECORD	ZONE	CD	GO
					SIGN.	

DRN.:SRB DATE: 27/3/2015 CHD.:SCB DATE:

APPROVED:BR RAO DATE: 27/3/2015 FOR DIRECTOR

SEALED : DATE : / /

SCALE : NTS EST. MASS : 0.22 kg

DESIGN AUTHORITY : ARDE Pashan, Pune-21

MATERIAL : ALUMINIUM ALLOY TO IS 733:1983, DESIGNATION NO.: 64430 (M CONDITION)

PROTECTIVE FINISH : ANODIZING TO IS1868:1996, AC10

ASSY DRG NO. : 8603 03 02 01 01 000 00PA

TITLE : MODULE CAP

DRAWING No. : 8603 03 02 01 01 005 00PA

PART No. : DS CAT No. : AHSP :