FOR EXPLANATION OF DIMENSIONING ETC., SEE C.O.A.(I) GUIDE No. 001-1972
THIRD ANGLE PROJECTION. DIMENSIONS ARE IN mm.

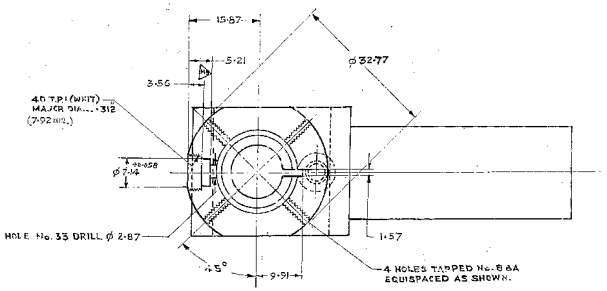

SECTION AT B.B

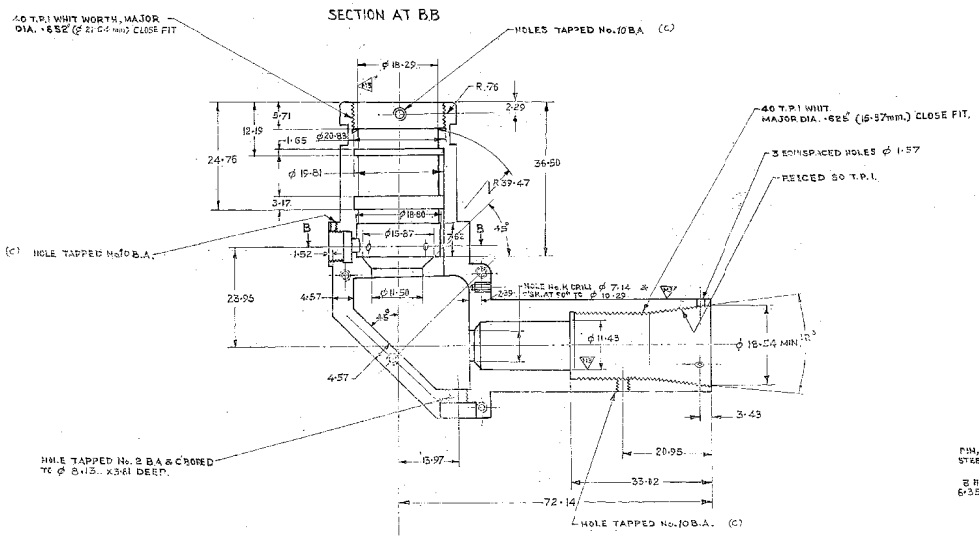

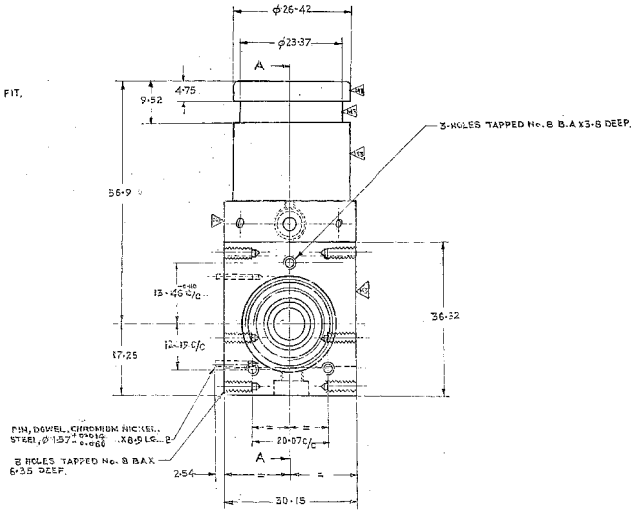

SECTION AT A-A

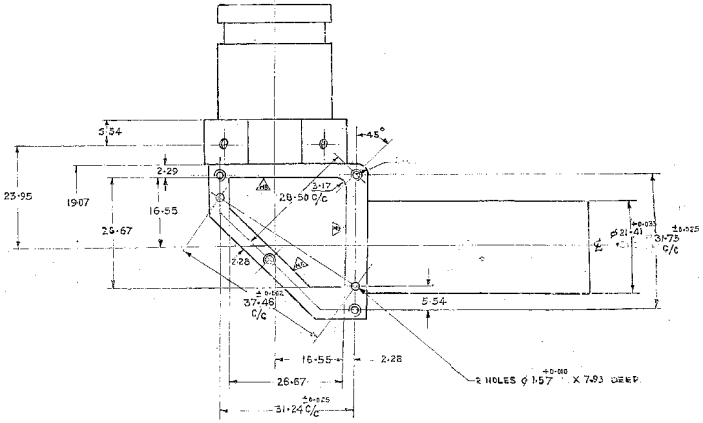

FINISH: OUTSIDE TO BE PAINTED, APPLY PRIMER TO IS:2075-1962 AND PAINTED TO IS:4923-1972 (DC-114 OF IS:5-1978) EXCEPT BEARING SURFACES. INSIDE ANODISED BLACK DULL.

DC: 7118-2 HOLES SIZE AMENDED & BLACK			6-7-76		
DC: 7118-2 "DOWEL PIN" CANCELLED			23.6.93		
DC: 7118-2 SHEET ADDED			18.10.94	DRAWN MLD	TRACED MLD	APPROVED Sd/-
DC: 7118-2 FINISH ADDED			13.7.98			
DC: 7118-2 DIM. REVISED & HOLE EDIT			16.11.99	CHECKED		FOR CONTROLLER GUIDE (INDIA)
DC: 7118-2 REVISED AS PER DIM.			18.11.99			
DC: 7118-2 No. ADDED			18.11.99			
P.C.01:-4554-T. BRG. REPLACED INCORPORATING ALL THE PREVIOUS AMENDMENTS & SEALED IN SUPERSESSION OF EXISTING ONE			27.4.83	SCALE 1:2.1	DATE	
AMENDMENTS	SIG.	DATE		DRG. No.		
MATL:- ALUMINIUM ALLOY, 24S45W. OF IS:733 1964				CH-140/1		
FINISH: OUTSIDE PAINTED WITH ALKYD ENAMEL EXCEPT BEARING SURFACES. INSIDE ANODISED BLACK				CAT./PART No. 1240-002245		
BODY				SHTS.	SHT.	