DRG.NO. 44P 02001*

PROTECTIVE FINISH: PHOSPHATED TO SPECN. JSS: 0465-01-1988 CLASS-1 (ACCELERATED) OIL FINISH

~~SURFACE 'Y' SHOULD BE CHROME PLATED. COATING THICKNESS -0.010 mm.~~

SURFACE 'Y' SHOULD BE CHROME FLASHED-0.01 (MAX.)

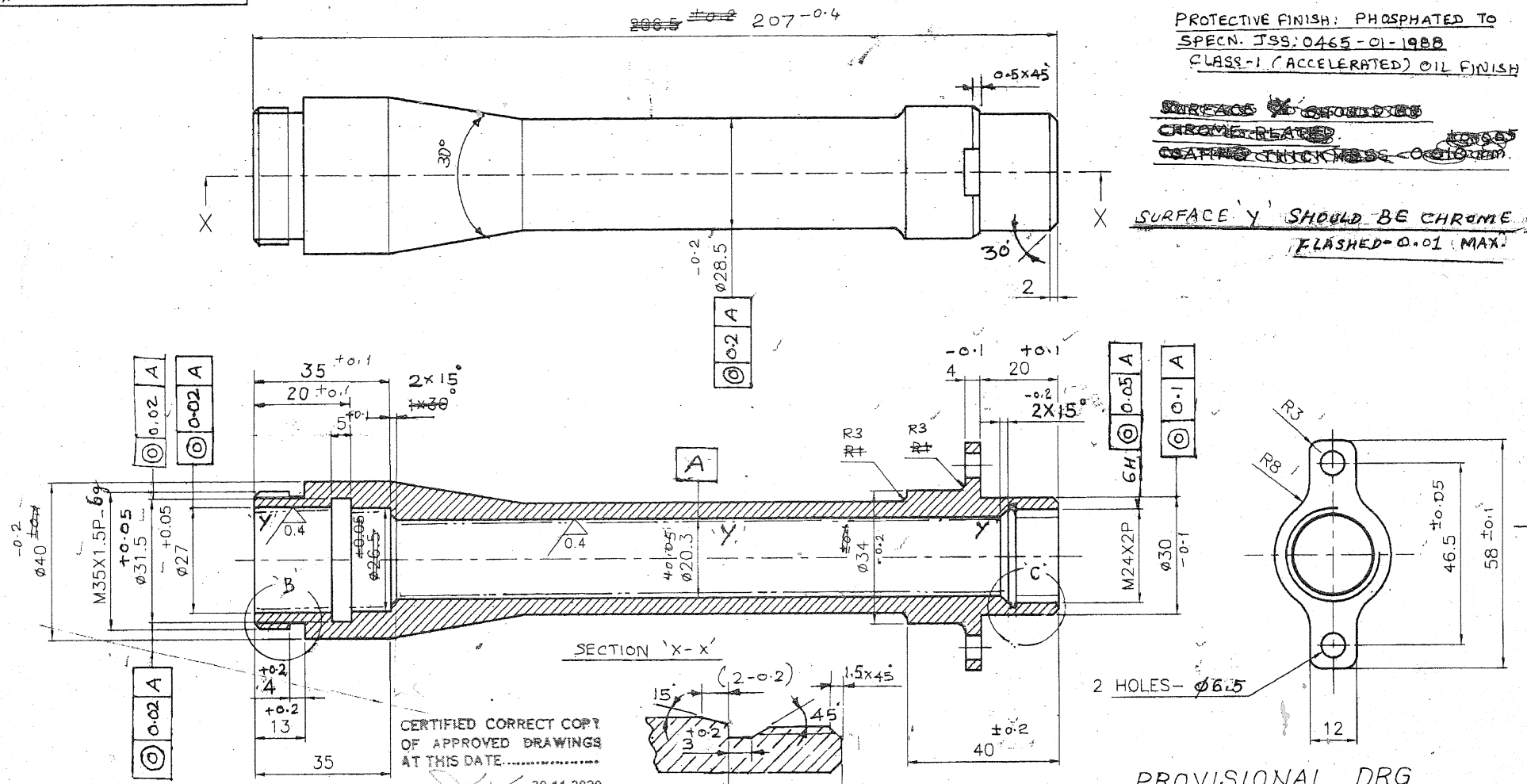

SECTION 'X-X'

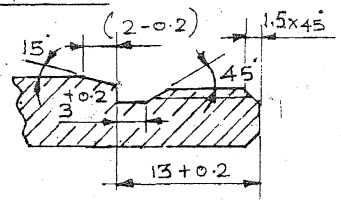

ENLARGED VIEW AT 'C'

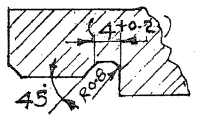

ENLARGED VIEW AT 'B'

CERTIFIED CORRECT COPY OF APPROVED DRAWINGS AT THIS DATE.....

30.11.2020

Design & Drawing Office
Ordnance Factory,
Tiruchirappalli-620014

UN CONTROLLED COPY

PROVISIONAL DRG.

① On 21/3/07

MATERIAL:- 30XH2MØA. GOST. 4543-71, HARDNESS: 260-300HB

ALT. MATERIAL: BS.970 Pt.1-1983 Gr. 826 M31 (OR) EN25

HARDNESS: RC 34-41

SHARP CORNERS SHOULD BE BLUNT TO R0.3

PART NO.	DESCRIPTIONS	NO OFF	MATERIAL	TREATMENT	REMARKS

	SIGNATURE & DATE.	SUB: CYLINDER	SCALE 1:1
TRACED		FOR: RECOIL DAMPER ASSY HOT	STORE DRG.NO.
DRAWN		OF: 14.5/20MM AMR	
CHECKED		DES.REF.NO.	OPERATION NO.
OIC/D&DO		DRG. No.: 44P 02001*	
OFFICER/ PRODN.		ORDNANCE FACTORY TIRUCHIRAPPALLI-16.	SHEETS: 1
OFFICER/ D&DO			SHEET No.: 1
APPROVED ON. 07/2005			

AMENDMENTS	SIG. & DATE
DA. No. 035/19 Dt. 12/7/19	12/7/19