D.S. CAT. NO. 1005-007859

DRAWING CONVENTIONS CONFORM TO JSG-0104
DIMNS. ARE IN m.m. | GEN. TOL. 'MEDIUM' IS:2102

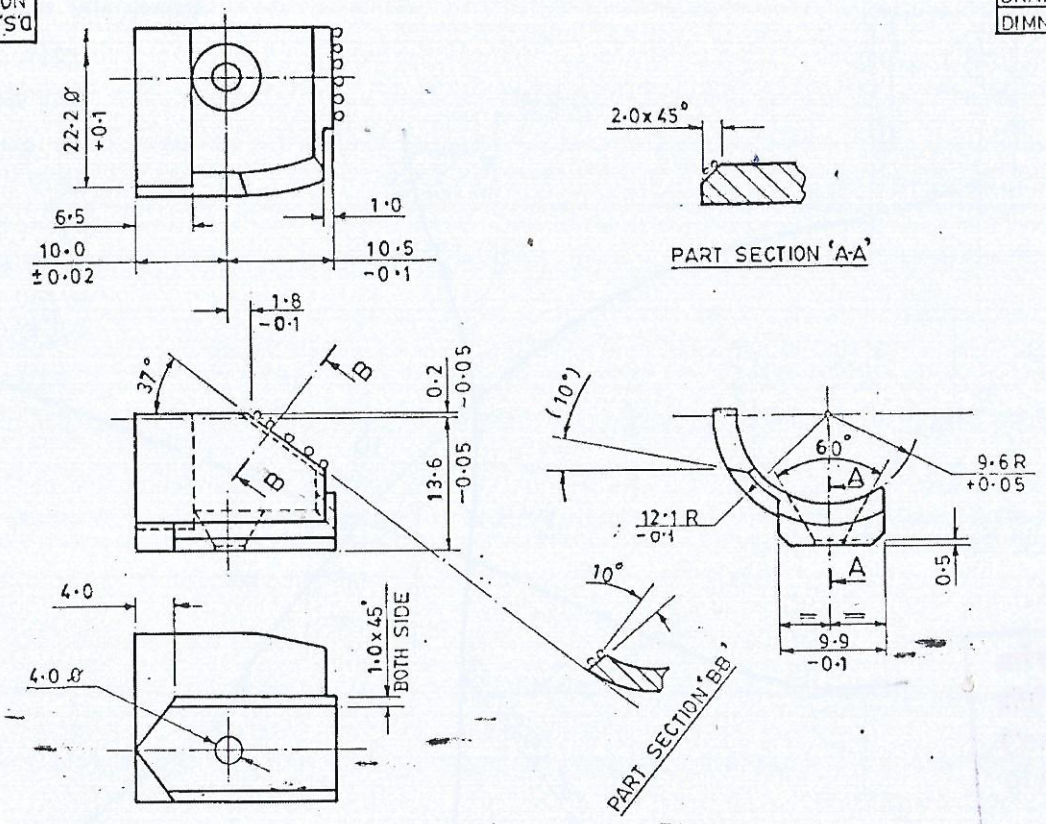

NOTE :-

TOLERANCE FOR ANGLES ± 30'

INDUCTION HARDENED AT ZONE SHOWN THUS ∞∞∞ TO A DEPTH OF 1·0 MIN.

MARKING (SUITABLY) ON SAMPLE / TAG

Yr. OF Mfg.

MANUFACTURER'S CODE

D.S. CAT. NO.

MTO

19.08.15

कार्यशाला प्रबन्धक
Jr. Works Manager
मानक प्रकोष्ठ
STANDARD CELL

NSN : B1/10DE-72-0000859

DATE	AUTHY.	BRIEF RECORD	ZONE	I/C DO	G.O.
15.9.16	26942-SA	— MATERIAL AMENDED			
26.6.10	25516-SA	NSN ADDED		FOR CD	
9-4-05	26050-SA	MATERIAL AMENDED			
22-11-04	26011-SA	IN MATERIAL (EN 42) DELETED.			
12-4-98	24083-SA	SPECN. FOR MATERIAL AMENDED			
15-11-97	23957-SA	FOROMA CHANGED, NOTE DELETED, MARKING NOTE ADDED, VIEWS SHOWN CORRECTLY, NEG. RE-TRACED & DRG. PROV. RE-SEALED	A/3 C/5		
		PREVIOUS D.C. NO. 23750-SA & 23927-SA			COPY

SEALED :- PROV. D.C. NO. 23750-SA, DT. 20 3.97 — SIGN.

NOMENCLATURE :- GUIDE PIECE

DRN. | CHD. | TPD. | COMP.

SCALE :- 2:1

EST. MASS —

APPROVED DT. 21.8.81

NEG. RE-TRACED

DT. 15.11.97 I/C DO

MATERIAL :- IS : 4072-1975 Gd. 70C6

H.T./HARDNESS :- 475 TO 525 H.V.

PROTECTIVE FINISH :- PHOSPHATED TO SPECN. JSS:0465-01: 1988 CLASS II (ACCELERATED) OIL FINISH

AHSP CQA(SA), ICHAPUR

ASSY. 1005-007892

DGNR'S REF. ARDE SK.2689/135

PART NO.

DRG. NO.

D.S. CAT. NO. 1005-007859

Create PDF files without this message by purchasing novaPDF printer (http://www.novapdf.com)

C4 RL