ЕСКД

БШ8.388.004

9-04092

COATING : CHEMICAL PASSIVATION / VARNISH TO JSS-8010-63.
AUTHORITY : CQA(A) FAX No. QA13718. DT. 23-02-04.

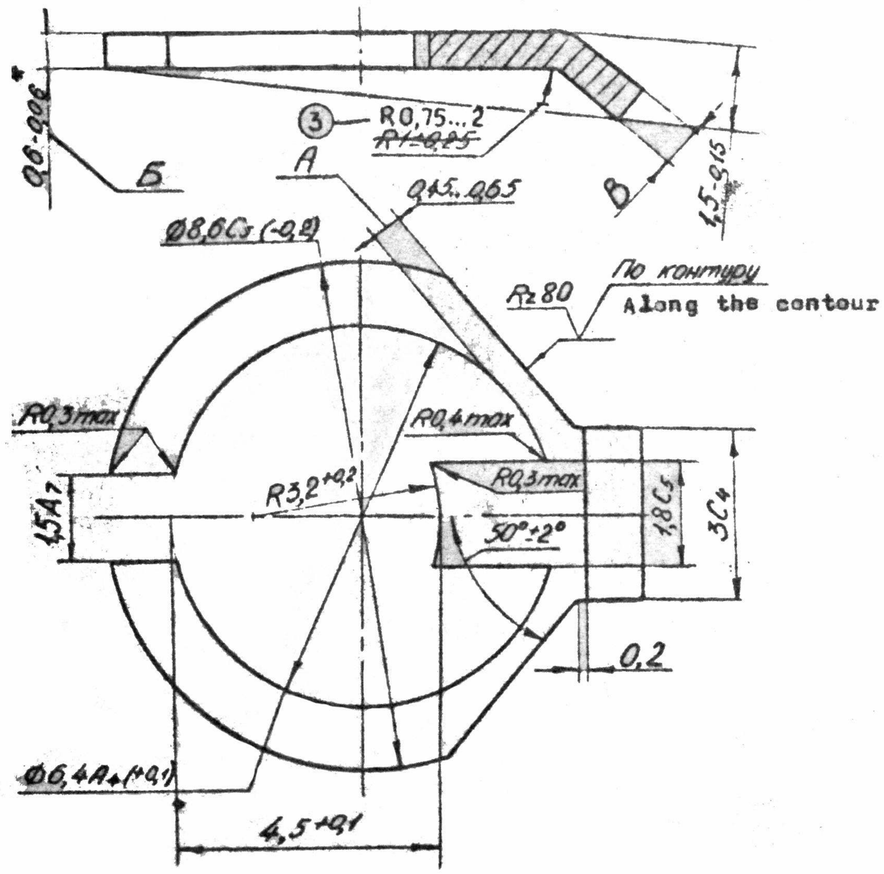

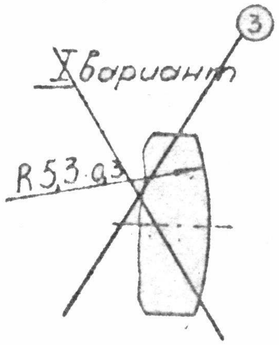

Развертка
Development

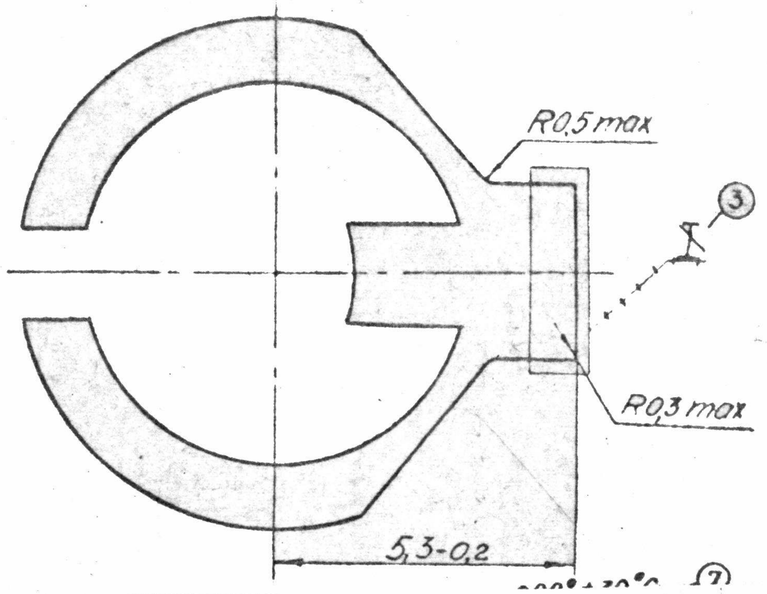

Spread of temperature to ensure the fulfillment of requirement ~~at~~ ref. No. 6 for one batch of parts not to exceed 30°C.

I. Anneal clip at a temperature of 290° ± 30°C for two hours in ~~case of~~ vaccum case.

24-9-87	DCI 34241-A	DRG PROV. SEALED			
DATE	AUTHORITY	REVISION		SIG AHSP	SIG DO

Обозначение по единому классификатору	APPROVED FOR CI(A)
9-04092	AHSP:- CI(A) KIRKEE 9-K-715
БШ8.388.004	Sheet No 1 / No of Sheets 2

SIG	SHT	DOC NO	SIGN	DATE
DRAWN				
EDT/CHKD				
F/M, DC.				
DIV.OFFR				
		NAME	SIGN	DATE

Clip
TF - 003

Brass Band 0.6 НД Л63
GOST 2208-75

SHEET WEIGHT SCALE
A A 0,11 1:1
TOTAL SHEETS

ORDNANCE FACTORY PROJECT HYDERABAD

ЕСКД

Rz80 (√)

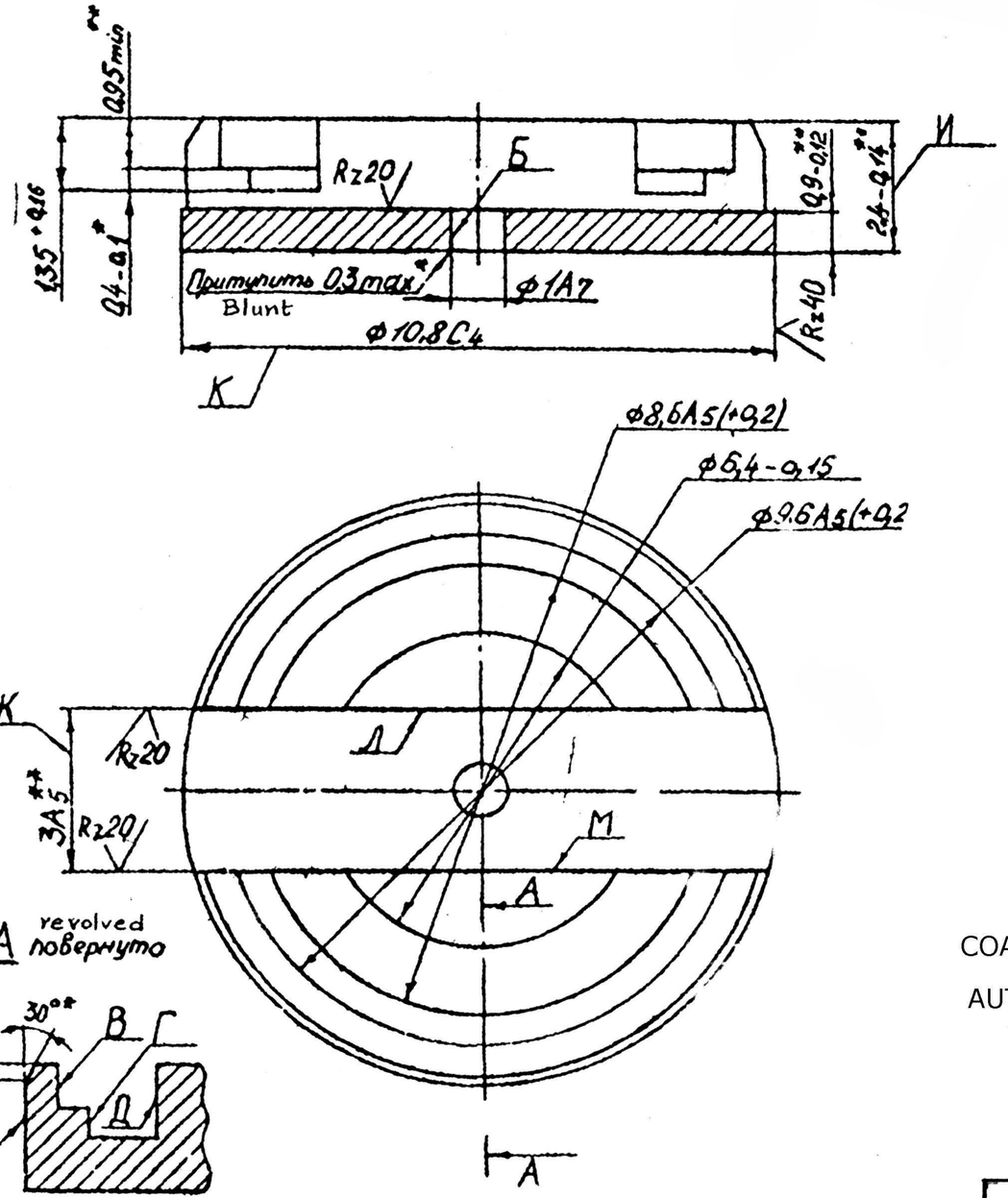

1. *Dimensions ensured by tools.
2. **Dimensions subjected to total checking.
3. Finish surfaces Б, В, Г, Д, Е in one setting
4. Radius of internal rounding-off not to exceed 0.2 MM.
5. Coating : chemical passivation.
6. The following is allowed :
   a) Presence of marks on surface Д, М with a depth upto 0,1 MM;
   b) Coating with varnish ЛМ-4(1) OST B 84-811-73; chemical passivation coating/varnish ЛМ-4(1) OST B 84-811-73;
   c) Reduction of dimension K in places of grooves with dimension Ж
   d) Local reduction of dimension И upto 2,2 MM on the length of 0,2 of circumference.
7. Other requirements are as per OST B 84-264-81.

INDIGENOUS EQUIVALENT MATERIAL :-
IS;733 REAFFIRMED 2006 DESG 24345 IN WP COND

NOTE:- NO HIGH GRAIN SIZE AREAS ARE PERMITTED IN THE FINISHED PRODUCT AFTER MACHINING.

COATING : CHEMICAL PASSIVATION/VARNISH TO JSS - 8010 - 63

AUTH : CQA (A) FAX. No. QA/37/8 DT. 23/02/2004

APPROVED. FOR CQA(A)

AH SP:- CQA(A) KIRKEE

9-K-715

9-04092

TF - 023

БЩ9.II6.042

Safety Plug

SHEET WEIGHT SCALE 0,35 kg 1:1

Round Bar A1 1" GOST 21488-76

ORDNANCE FACTORY PROJECT HYDERABAD

DATE	AUTHORITY	REVISION		
05-07-2011	DGQA S.O. Sh-Chap 10 para 40	Drg scan,clean & edit without change & m/c replaced in supersession of Existing dilapidated copy of Same No		
08-11-10	DC.3727-A	INDIGENOUS EQUIVALENT NOTE UPDATED		
5-11-98	DC 36482-A	INDIGENOUS EQUIVALENT NOTE NO HIGH---- MACHINING		
24-9-91	DC 34241-A	DRG PROV SEA		

DESIGN	DOC NO	IS	DATE
DRAWN			
EDT CHKD			
F/M, DC.			
D.V.OFFR			
	SC	SK	DATE

Перв. примен. | Справ. № | Подп. и дата | Инв. № дубл. | Взам. инв. № | Подп. и дата | Инв. № подл.

22105

D-2040/44

44

2040

ЕСКД

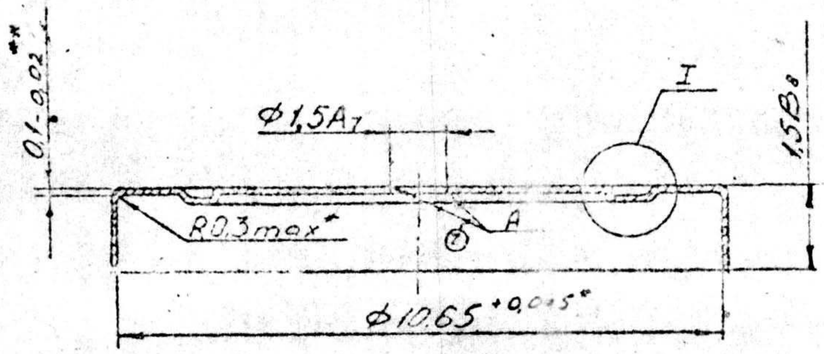

1. Alternate materials are Band soft of any grade GOST 4986-79 without coating, band 08kп-ОМ-3-0,1 GOST 503-81.
2. *Dimensions ensured by tools.
3. **Dimensions for reference.
4. Coating tin 6 microns thick, chromatized.
5. The following is allowed :
   a) Coating alloy Cu Zn (70%) 3 μ Sn 3μ or Cu 3μ Sn 3μ;
   b) Presence of burrs (except edge A), corrugations as against the standard sample, established by manufacture and agreed with customer representative at manufacturing plant.
6. Other requirements are as per OST B 84-264-81.
7. Dimensions marked with *** are subjected to total checking.

I
M100:1

⊛ 8. INDG. EQVT. MATL. :- ~~BS 1449 SEC. 2, CR3 OR IS 513DD WITH UTS 55 Kgf/mm² in Heavily worked Condition.~~
IS513-2008 Gr. CR3 OR Gd1 CS of BS1449 SECTION 1.1:1991.

COATING :- Tin plating to DEF-STAN 3-8/1 followed by Chromate Passivation to DEF-130.

AUTH :- CQA(A) FAX No. QA/3718.Dt. 23.02.04.

APPROVED. FOR CI(A)

AHSP:- C I (A) KIRKEE

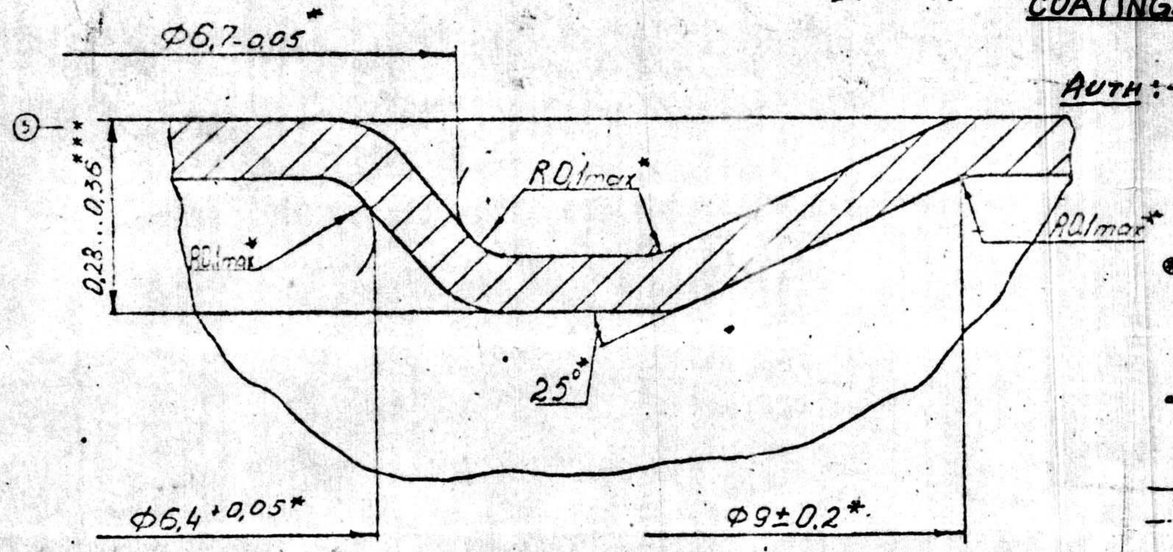

DATE	AUTHORITY	REVISION.	SIG AHSP	SIG. DO.
08/11/2010	D.C.No:-37271-A	NOTE No. 8 ADDED.		
24.9.87	DCI 34241-A	DRG. PROV. SEALED.		62

Обозначение по единому классификатору	
9-04092	9-K-715

БШ8.635.085

SNO/SHT	DOC NO	SIGN	DATE
DRAWN			
EDT/CHKD			
F/M, DC.			
DIV.OFFR			
	NAME	SIGN	DATE

Cap
TF:024

Band 08kп-BH-3-0,1 (steel) GOST 503-81

SHEET	WEIGHT	SCALE
1 of 1 A	0,1	10:1

TOTAL SHEETS

ORDNANCE FACTORY PROJECT HYDERABAD

Перв. примен. | Справ. № | Подп. и дата | Инв. № дубл. | Взам. инв. №

22175 | 22104

(32)

ЕСКД

ЖЛ 8.264.006

9-04092

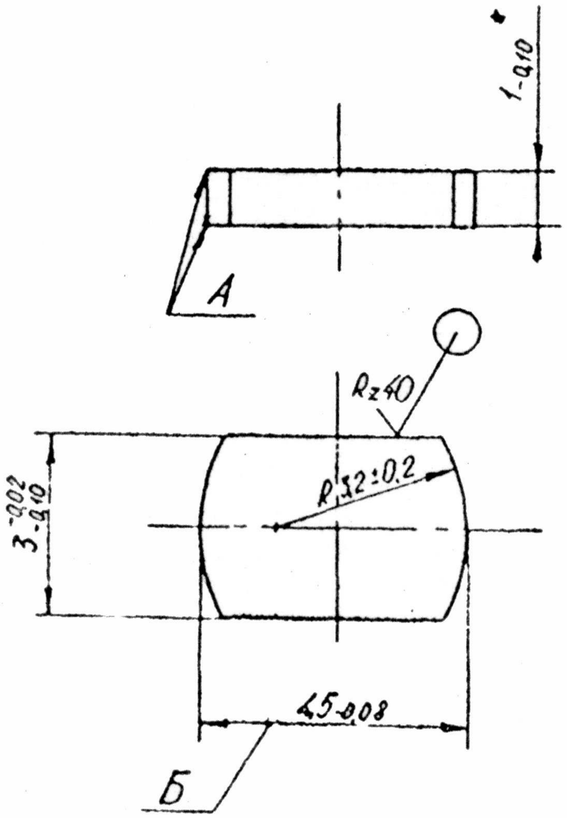

I. Alternate materials :
   a) Hard Band extra hard of any grade GOST 2208-75;
   b) Hard Band extra hard of any grade GOST 931-78.
2. *Dimensions for reference, other dimensions ensured by tools.
3. Coating : chemical passivation/varnish - ПВГ 2(1) OST B 84-1010-74 and coating - chemical passivation/ varnish ЛW-4(1) OST B 84-811-73 is also allowed.
4. Other requirements are as per OST B 84-264-81.
5. INDIGENOUS MATL :-
   BS EN 1652:1998 DESIGN CuZn 39 Pb 2 MATERIAL CONDITION R 420 WITH UTS = 42 - 50 kgf/mm² & Elon = 18% min.

COATING : CHEMICAL PASSIVATION / VARNISH TO JSS-8010-63.
AUTHORITY : CQA(A) FAX No. QA13718. DT. 23-02-04.

Designation	Edge A	Requirements
БW8.264.006	Sharp	Requirement "Sharp" is allowed to produce only to part of edge A, having dimension Б
-01	—	—

DATE	AUTHORITY	REVISION	SIG 1 AHSP	SIG DO.
05-01-2011	DGQA S.O Sec I Chap 10 para 40	Drg.scan,clean & edit without change & m/c replaced in supersession of existing dilapidated copy of same No		
08-11-10	DC.37271-A.	INDIGENOUS MATL ADDED AS NOTE № 5.		
24-9-87	DCI 34241-A	DRG PROV. SEALED		02

APPROVED FOR CQA(A)

AHSP:-CQA(A) KIRKEE

BNCSH.	DOC NO	SIGN	DATE
DRAWN			
EDT/CHKD			
F/M,DC.			
DIV.OFFR			
	NAME	SIGN	DATE

9-04092 9-K-715

БW8.264.006

Slider

TF - 025

Brass Strip : ОЧ Л C59-I 1 mm GOST 931-78

A | 0.1 | 0:1

ORDANANCE FACTORY PROJECT HYDERABAD

Инв. № подл. 23350 | Подп. и дата | Взам. инв. № 21694 | Инв. № дубл. | Подп. и дата

Т.ПОНТР - Ж.С.Б. Сергеев

Н.контр. Ж.С.Б. Сергеев

Спецн. Ж

Гл.инж. проекта

ГОСТ 12

ЕСКД

ЕШ6.042.512 СБ

9-04092

Перв. примен.

Справ. №

Подп. и дата

Инв. № дубл.

Взам. инв. №

22101

Подп. и дата

Инв. № подл.

177

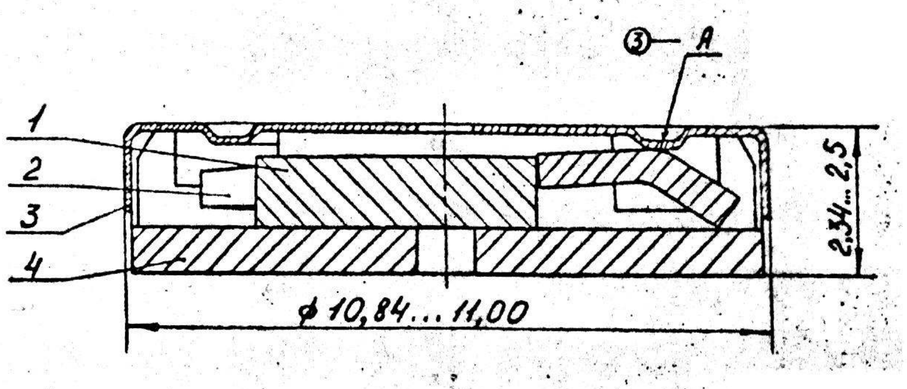

Колпачок поз.3 не показан
(Cap ref No 3 is not shown)

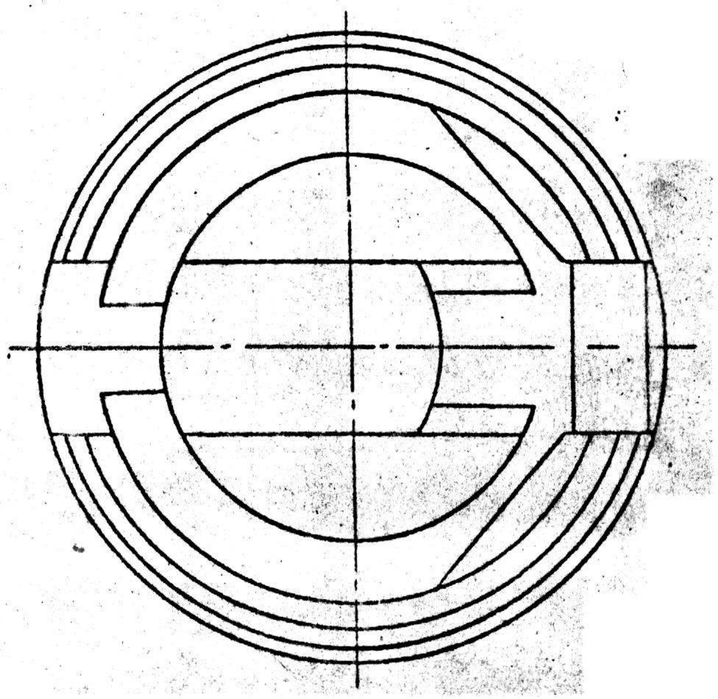

I. Dimensions for reference.
2. Accuracy of placing the clamp ref. No. 2 is subjected to total checking.
3. Cap ref. No. 3 should be pressed on safety plug ref. No. 4 against the stop with force not exceeding 300 Kgf.

5. Other requirements are as per OST B 84-264-81.
6. Impression of climp shank ref. No. 2 on surface A is allowed as against the standard sample established by manufacture and agreed with customer representative at manufacturing plant.

DATE	AUTHORITY	REVISION	SIG AHSP	SIG D.O.
24-9-87	DCI. 34241-A	DRG. PROV. SEALED.		

APPROVED
FOR CI(A)

9-04092 | 9K-715

ЕШ6.042.512 СБ

AHSP:- C I (A) KIRKEE.

	DOC NO	SIGN	DATE
DRAWN			
EDT/CHKD			
F/M, D.C.			
DIV.OFFR			
	NAME	SIGN	DATE

Safety Lock
Assembly drawing

SHEET | WEIGHT | SCALE
H | 0,7г | 10:1

TOTAL SHEETS

ORDNANCE FACTORIES PROJECT HYDERABAD

TF-038

Format	Zone	Reference	Designation	Description	Quantity	Remarks
				Documentation		
12			GW 6.042.512 C6	Assembly drawing		9-04092
				Parts		
11	12	1	GW 8.264.006	Slider	1	9-04092
12		2	GW 8.388.004	Clip	1	9-04092
12		3	GW 8.635.085	Cap	1	9-04092
12		4	GW 9.116.042	Safety plug	1	9-04092

24-9-87	DCI 34241-A	DRG. PROV. SEALED.		
DATE	AUTHORITY	REVISION	SIG AHSP.	SIG. D.O.

APPROVED

FOR CI(A)

AHSP :-- C I (A) KIRKEE.

9-04092

9-K-715

GW6.042.512

Safety lock .. List of documents

TF-038