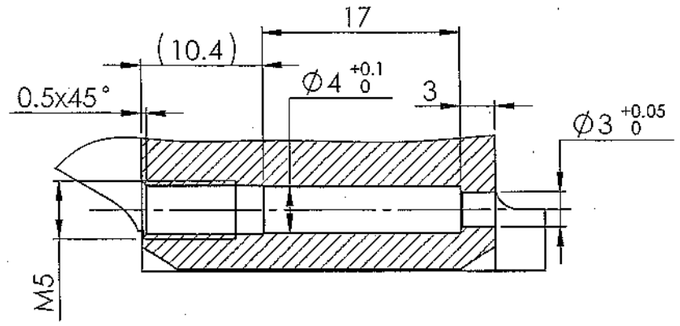

SECTION C-C

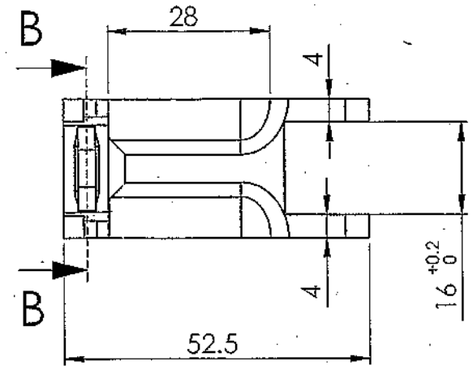

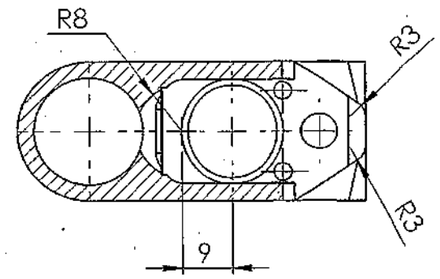

SECTION B-B

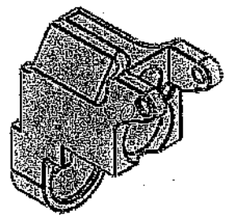

UN CONTROLLED COPY
CERTIFIED CORRECT COPY OF APPROVED DRAWINGS AT THIS DATE 12/10/22
DESIGN & DRAWING OFFICE,
ORDNANCE FACTORY, TIRUCHIRAPPALLI-620 016.

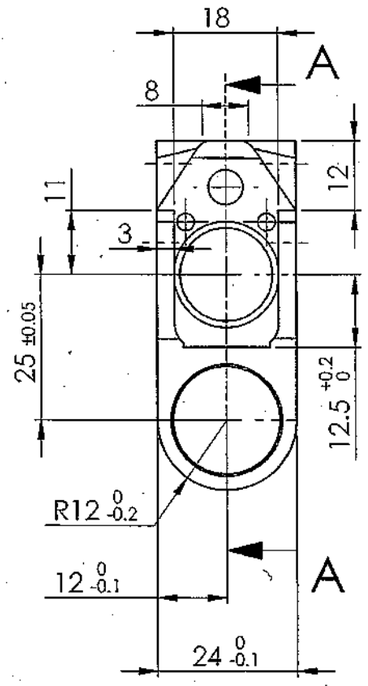

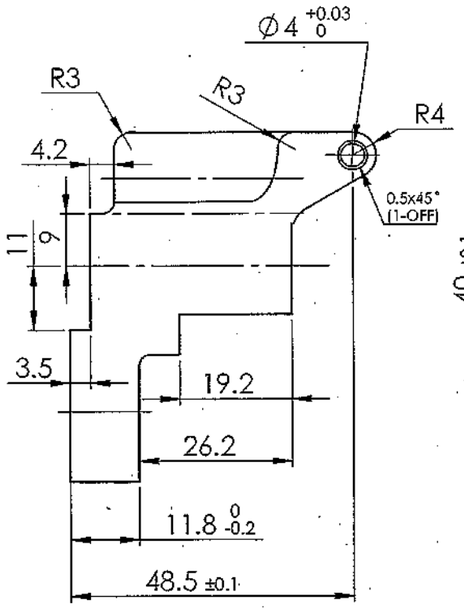

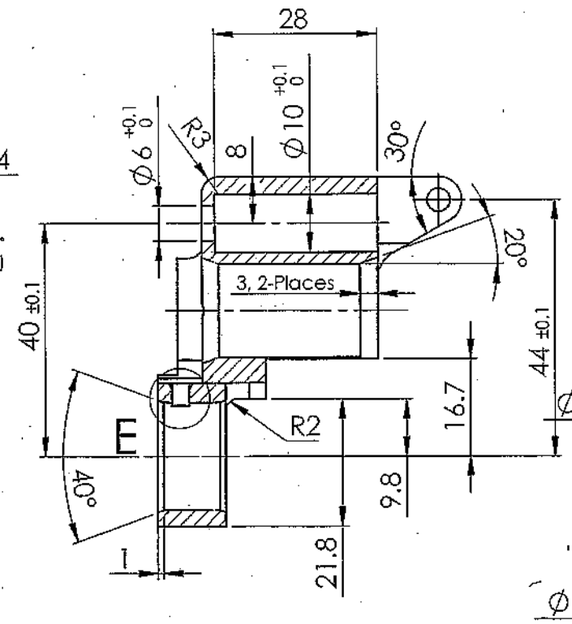

SECTION A-A

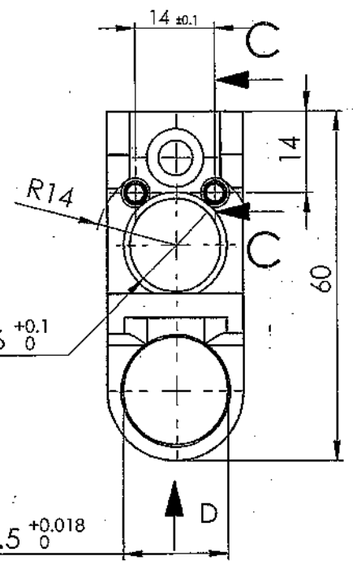

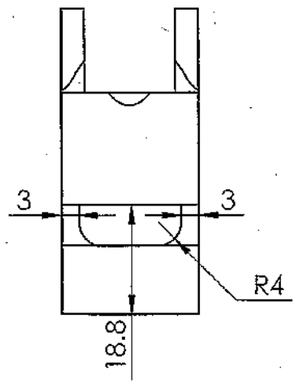

VIEW D

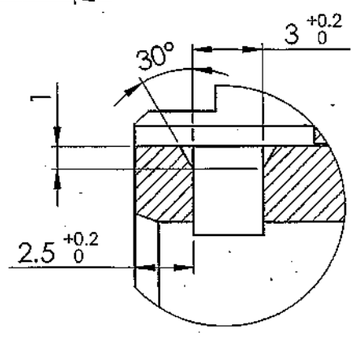

DETAIL E

Material :
BS:970 Pt.1 1983 Sec.3 Gr.708 M40 (or) EN 19A
BS:970 Pt.1 1983 Sec.3 Gr.709 M40 (or) EN 19
BS:970 Pt.1 1983 Sec.3 Gr.817 M40 (or) EN 24

Material: As Above	3rd Angle	DWG Details SIGN	DATE.	SUB: **REAR BLOCK**	
Alt. Material:	DRAWN	V. Bala		FOR: Barrel Assy	Do not scale Drawing
	CHECKED			PROJ.: TriCa	
Hardness: 290 - 360 HV	HOS/D&DO	P. Toyton		Design Ref	All Dimensions are in mm
	DO/Prodn			DWG. No.: **KC3 - 1202-** A3	QPG - 1
Finish: Phosphating to JSS:0465-01-1994, Class-II OIL finish	DO/QC			ORDNANCE FACTORY TIRUCHIRAPPALLI-16.	Wt. (Appx) gm
	DO/DDO	G Kumar			SHEET: 1 OF 1
Un tollerated dimensions IS:2102 Medium	APPROVED ON: 30/04/22				