| DRG No | 8603 | 02 | 01 | 01 | 06 | 000 | 00DC |
|---|---|---|---|---|---|---|---|
| | IC | SS | S | AA | A | C | SST |

GEN TON : MEDIUM CLASS
TO IS : 2102

DRG CONVENTIONS CONFORM TO INDIAN STD.
DIM IN mm UNLESS OTHERWISE STATED

LIST OF COMPONENTS

| Sl.No. | NOMENCLATURE | DRAWING No. | QTY |
|---|---|---|---|
| 1 | NOZZLE ASSY | 8603 02 01 06 10 000 12DD | 1 |
| 2 | FIN CYLINDER ASSY | 8603 02 01 06 11 000 00DD | 1 |
| 3 | GRUB SCREW | STD UNBRAKO SOCKET SET SCREW (M8 X 1.25 X 8 LONG ) | 8 |

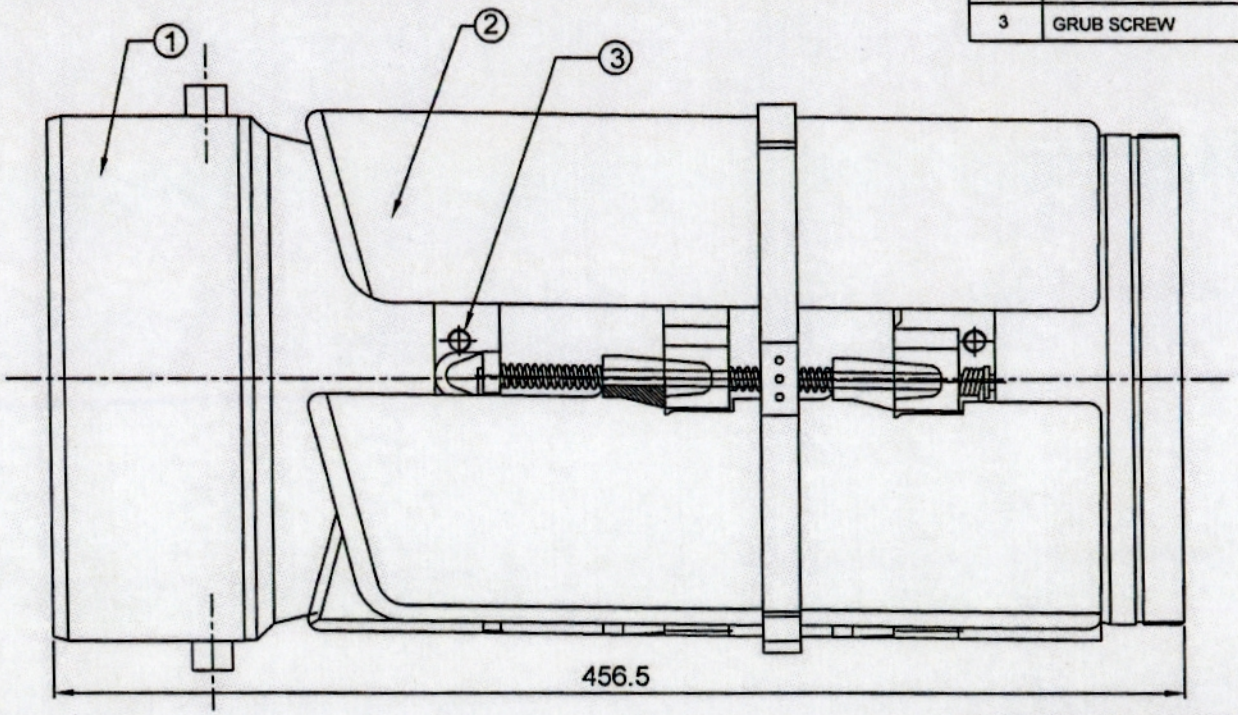


NOTES :

1. 4 HOLES (M8x1.25Px8 DEEP) TO BE DRILLED & TAPPED ON CENTER OF 4 LUGS OF NOZZLE FRONT SUCH THAT THE EDGE OF THE FIN CYLINDER SHOULD REST ON NOZZLE REAR
2. 4 HOLES (M8x1.25Px7 DEEP) TO BE DRILLED & TAPPED ON NOZZLE REAR
3. THE ABOVE OPERATIONS SHOULD BE CARRIED OUT AFTER PNEUMATIC TESTING
4. PNEUMATIC LEAK PROOF TEST TO BE CARRIED OUT AT 2 BAR PRESSURE.
5. TOTAL WEIGHT = 20.5 kg.

| R No | DATE | AUTHORITY | BRIEF RECORD | ZONE | CD | GO |
|---|---|---|---|---|---|---|
| 2 | 18 MAY 2011 | CRC Meeting | Nozzle Assy and Fin Cylinder Assy Drgs. No. changed. | A-5,8 | | |
| 1 | 29/12/06 | PRC 38 | Sub-Assy drg of Nozzle and Fin Cylinder Assy modified | A-5,8 | | |

SIGN

DRN P K SINGH | CHD | MATERIAL

APPD DATE 30/12 SRS FOR DIRECTOR | PROTECTIVE FINISH

SEALED DATE

SCALE 1:2 | EST MASS | TITLE

DESIGN AUTHORITY ARDE

# STABILIZER ASSEMBLY

DRG No 8603 02 01 01 06 000 00DC
IC SS S AA A C SST

PART No | DS CAT No | AHSP

Appx-8

24