| | |
|---|---|
| GEN.TOL.MEDIUM/COARSE/FINE CLASS TO IS 12102 | DRAWING CONVENTION CONFIRM TO INDIAN STDS. DIMN.IN mm UNLESS OTHERWISE STATED |

DRG NO 0 0 0 5 (IC) 0 1 (SS) 0 1 (S) 0 0 (AA) 0 4 (A) 0 0 2 (C) 0 0 X A (SST)

NOTES:–

1–REMOVE ALL SHARP EDGES AND BURRS.

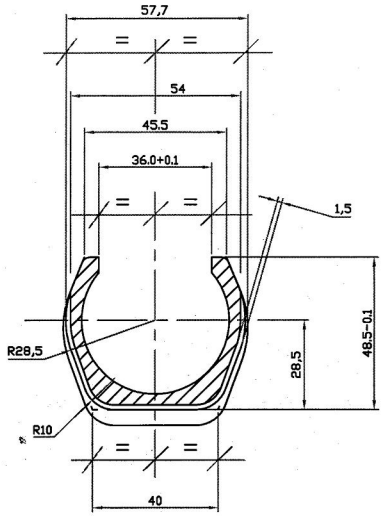


SECTION–AA

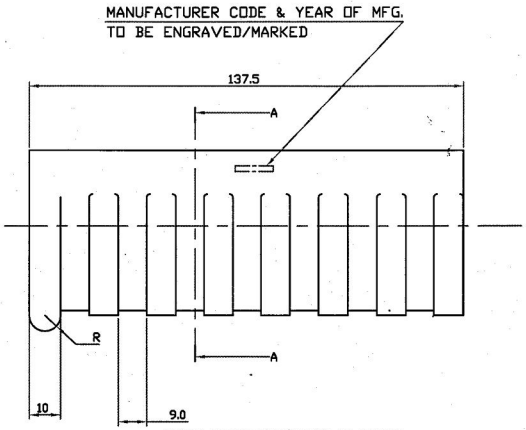


SEVEN SLOTS EUISPACED AS SHOWN.

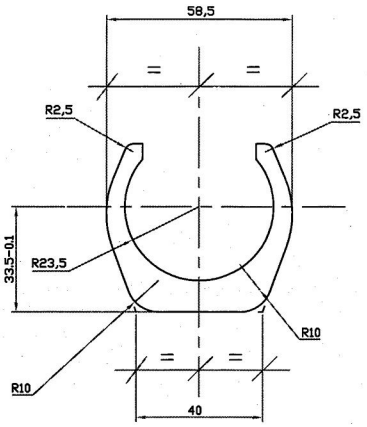


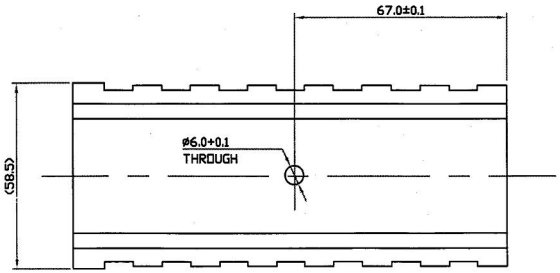


S. A. DRG OFFICE
A R D E. PASHAN
PUNE-411021
DATE

FOR MATL.PHYSICAL PROPERTIES AND TESTS REFER SPECN. No. ARDE/SPCN./536(PROV.)

COLOUR:–BLACK COLOUR
TO IS 5–1994: SC No. 220
ADDITION OF PIGMENT NOT PERMITED

| R NO | DATE | AUTHORITY | BRIEF RECORD | ZONE | CD | GD |
|---|---|---|---|---|---|---|
| | | | | | SIGN | |

| | | |
|---|---|---|
| DRN ssd | CHD | MATERIAL: NYLON–6 |
| APPD DATE 03.03.15 | FOR DIRECTOR | PROTECTIVE FINISH |
| SEALED DATE | | |
| SCALE 1:1 | EST MASS | TITLE GUARD HAND |
| DESIGN AUTHORITY ARDE | | |

DRG NO 0 0 0 5 (IC) 0 1 (SS) 0 1 (S) 0 0 (AA) 0 4 (A) 0 0 2 (C) 0 0 X A (SST)

PART NO | DS CAT NO | AHSP

32P 4002*3