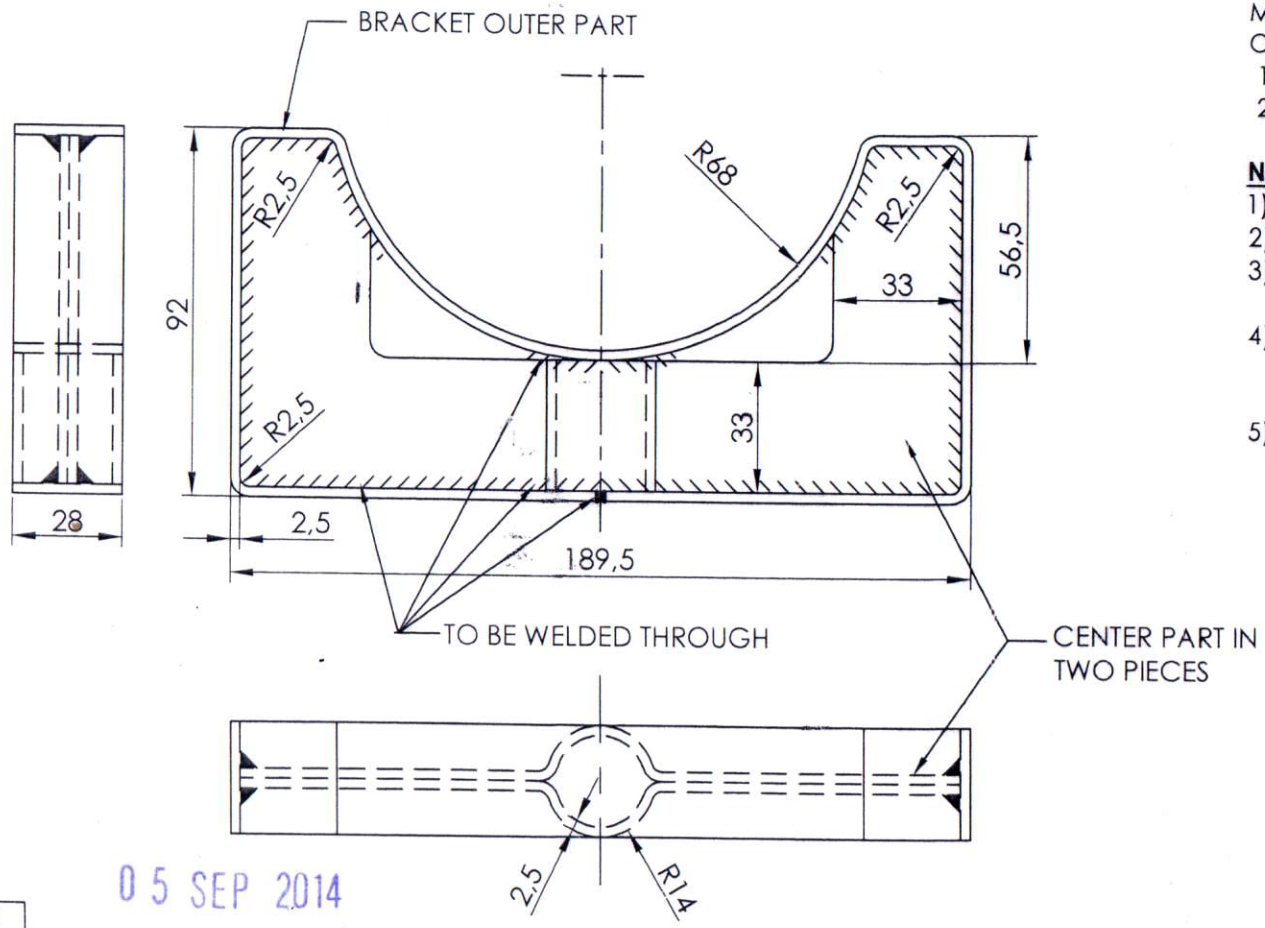

MATERIAL :

MILD STEEL SHEET 2.5 MM THICK SHOULD CONFIRM TO ANY ONE OF THE FOLLOWING SPECN :

1) IS:1079- 94 HOT ROLLED & ANNEALED Gd "D".
2) IS:513-94 COLD ROLLED & ANNEALED TYPE "D" BEST SURFAC

NOTE -

1) DRG. CONVENTION CONFORMING TO IS: SPEC.
2) TOLERANCE CONFORMING TO SPEC IS:2102 (MED).
3) BRACKET ARE WITHOUT PAINTING, BUT APPLIED WITH SUITAB OIL COATING AGAINST CORROSION.
4) THIS DRAWING IS PREPARED AS PER SHOP REQUIREMENT & NOTING NO. F/JGM/RNSC/PRODUCTION MATTER/14, Dt 05.05.2014.
5) SAMPLE MUST BE APPROVED BEFORE BULK SUPPLY.

PROPOSED DRAWING

05 SEP 2014

आरेखन की नवीनतम प्रति आरेखन कार्यालय, आयुध निर्माणी भुसावल द्वारा जारी की गई है।
Latest Copy of Drawing issued by Drawing Office, Ordnance Factory, Bhusawal.
अनुभाग प्रमुख, आरेखन कार्यालय
Head of Section, Drawing Office.

THIS DRAWING IS THE PROPERTY OF O.F.BHUSAWAL MINISTRY OF DEFENCE, GOVT.OF INDIA., IT SHOULD NOT BE COPIED / REPRODUCED IN ANY WAY.

R.NO.	DATE	AUTHORITY	REVISION	SIGN.
DRG. SEALED :-				

ITEM	DESCRIPTION	QTY.	MATL.	TREATMENT	REMA

TITLE :- PROPOSED BRACKET B1 FOR BOX C53A (REF. DRG. NO. OFB/C/1487 & ISV 2049)

NOTE :- 1) ALL DIMENSIONS ARE IN MM.
2) UNSPECIFIED TOLERANCES AS PER IS 2102 (MED).

SCALE :-1:1.5

ORDNANCE FACTORY BHUSAWAL

2014	NAME	SIGN	D
JWM/SHOP	S.N. PHALKE		
JWM/DGN.	ATUL		
JWM/CHD.	D.L. PATIL		
JWM/HOS/DO	D.L. PATIL		
DO/DO	KISHORE MAKHIJAN		

ID NO:Drg1\BOX-C53A\COMP\Bracke

DRG.NO: OFBh-C53A-C-20