JOB NO.
ST. TIME
SHEETS
FILE NAME
TX INCOMPLETE
TRANSACTION
ERROR
TX REPORT
TX IMAGE SET NOT TO DISPLAY
1588
02/08 17:30
DOC-7

DS.CAT. NO. 1005-000426

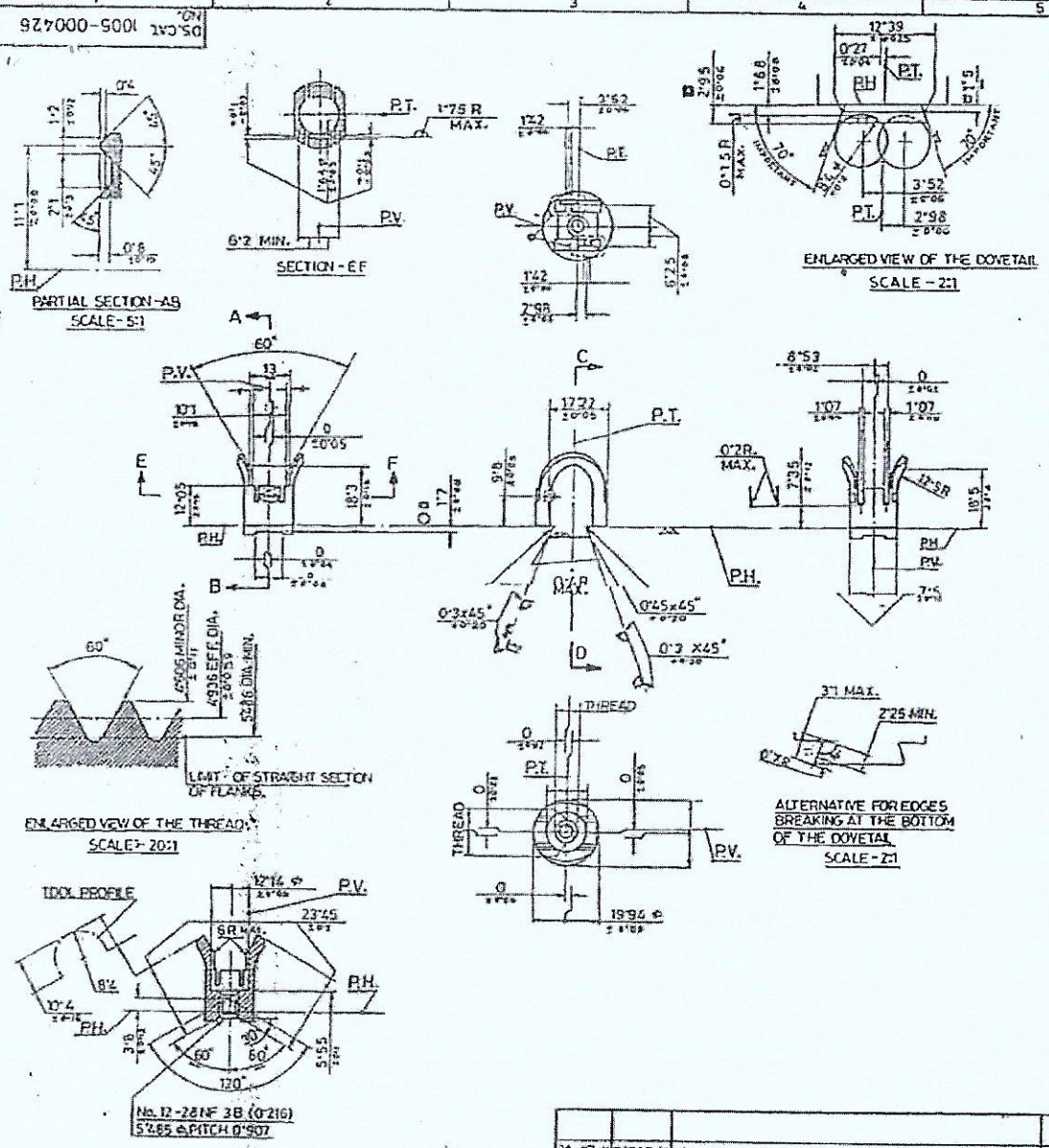

DIMENSIONS mm.

MARKING (SUITABLE) ON SAMPLE :-
MANUFACTURER'S CODE
D.S.CAT.NO.

PROTECTIVE FINISH :- PHOSPHATE TO SPECN. JSS 0465-01:1998 CLASS II (ACCELERATED), OIL FINISH.

ALLOWED DEVIATION FOR:- P.T. ±0.04, P.V. ±0.04, P.H. ±0.04

MATERIAL :- BS 970 PT. 1:19 83 Gr. 708 M-40 OR 709 M-40.

MATL - FOR INVESTMENT CASTING :-
TYPE CLA 5, GR. 'B' OF BS 3146
P.T. 1:74, HARDNESS 50-54 HRC.

ABBREVIATION :-
P.V. = PLANE OF VERTICAL
P.H. = PLANE OF HORIZONTAL
P.T. = PLANE OF TRANSVERSE

☐ SYMBOL MEANS THAT SAID DIMENSIONS MUST COMPULSORILY HAVE THE INDICATED DATUM AND THAT THE P.V., P.H. ON P.T. MAY NOT BE DATUM.

○ SYMBOL INDICATES THE DIMENSIONS OF LOCATING SURFACE WHICH ARE SITUATED ON THE SAME LEVEL BUT WHICH ARE MACHINED WITH MORE THAN ONE OPERATION.

SURFACE FINISH :-
AS PER IS: 3073-1967, WHERE NOT SPECIFIED SHOULD BE 'Y'

आरक्षण की सही प्रमाणित प्रतिलिपि दिनांक.....
Certified as correct copy of drg. on 20/08/19

20-07-11	26593-SA	ASSY. No. 1055-000838 WAS 1005-000423			
16-11-02	25576-SA	PROFORMA CHANGED, PROTECTIVE FINISH AMENDED, SURFACE FINISH SYMBOL AMENDED & SPECN. ADDED, SYMBOL NOTE 5, ADDED, NEG. RE-TRACED AND DRG. RE-SEALED.		C.D.	DAC
		PREVIOUS D.C. NOS. 15405-SA, 16102-SA, 16585-SA, 19351-SA, 19923-SA, 20851-SA, 21117-SA, 21872-SA, 22121-SA, 23239-SA AND 25292-SA		COPY	COPY
DATE	AUTHR.	BRIEF RECORD	ZONE	I.C.D.	G.D.

SEALED :- D.C. No. 25292-SA, DT. 14.03.2002 — SIGN.

NOMENCLATURE :- FORESIGHT HOUSING

DRN | CHD | TRD | COMP
SCALE :- 1:1, 2:1, 5:1, 20:1, — EST. MASS
DT 06-11-02 — I/C. D.O. — APPROVED. DT. NEG. RE TRACED
MATERIAL :-
H.T. / HARDNESS :- QUENCHED AND TEMPERED 50-54 HRC
PROTECTIVE FINISH :-

AHSP. CQA(SA), CHAPUR
ASSY. D.S.CAT. No. 1055-000838
DGNRS REF.
PART NO. 1002 A
DRG. NO. A1202
D.S. CAT. NO. 1005-000426

Create PDF files without this message by purchasing novaPDF printer (http://www.novapdf.com)