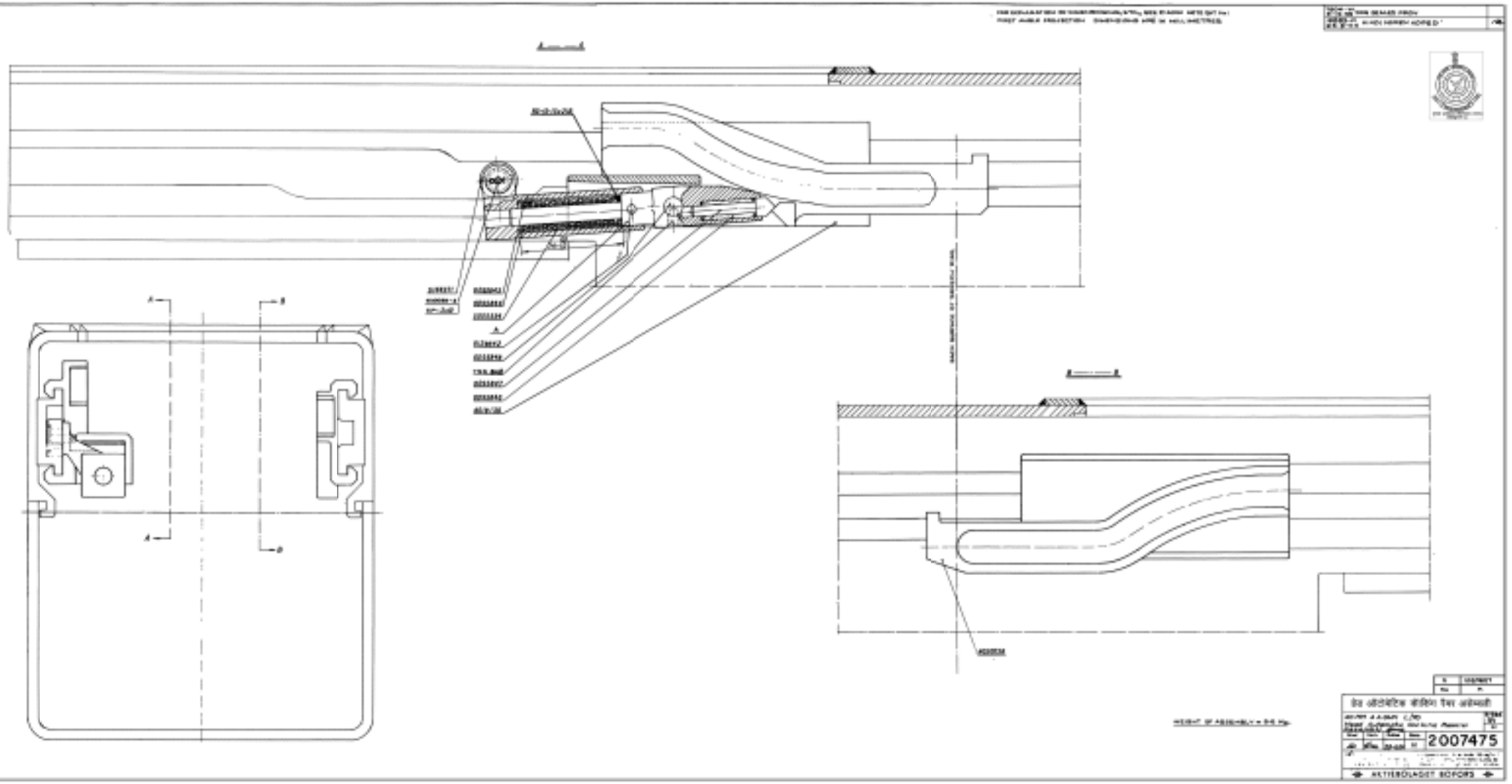
2007475

AKTIEBOLAGET
BOFORS
STANDARD

# PIN, COTTER SPLIT, TYPE: SP, METRIC

## SIZES/in पिन, कॉटर स्प्लिट, टाइप: एस पी, मेट्रिक साइजेस/इन

N4-8
16 10 5
1

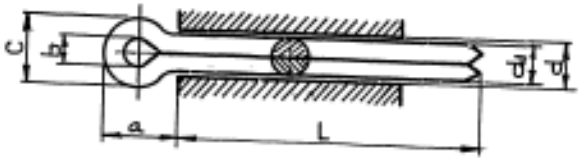


d = DIA OF HOLE FOR PIN

| d | 1 | 1·5 | 2 | 2·5 | 3 | 4 | 5 | 6 | 8 | 10 | 13 | 16 |
|---|---|---|---|---|---|---|---|---|---|---|---|---|
| $d_1$ h13 | 0·9 | 1·3 | 1·8 | 2·2 | 2·7 | 3·7 | 4·7 | 5·7 | 7·7 | 9·7 | 12·6 | 15·6 |
| a ≈ | 3 | 3·5 | 4·5 | 5 | 6 | 8 | 10 | 12 | 15 | 19 | 24 | 30 |
| b MAX | 0·8 | 1·2 | 1·6 | 1·8 | 2 | 3 | 4 | 5 | 6 | 8 | 10 | 13 |
| c ≈ | 1·7 | 2·5 | 3·4 | 4 | 4·7 | 6·7 | 8·7 | 10·7 | 13·7 | 17·7 | 22·6 | 28·6 |

| LENGTH L | | | | | | | | | | | |
|---|---|---|---|---|---|---|---|---|---|---|---|
| 6 | 8 | 10 | 12 | 15 | 20 | 28 | 35 | 45 | 60 | 100 | 130 |
| 8 | 10 | 12 | 15 | 18 | 22 | 30 | 40 | 50 | 65 | 110 | 140 |
| 10 | 12 | 15 | 18 | 20 | 25 | 35 | 45 | 55 | 70 | 120 | 150 |
| 12 | 15 | 18 | 20 | 22 | 28 | 40 | 50 | 60 | 75 | 130 | 160 |
| 15 | 18 | 20 | 22 | 25 | 30 | 45 | 55 | 65 | 80 | 140 | 180 |
| | 20 | 22 | 25 | 28 | 35 | 50 | 60 | 70 | 90 | 150 | 200 |
| | 22 | 25 | 28 | 30 | 40 | 55 | 65 | 75 | 100 | 160 | 220 |
| | 25 | 28 | 30 | 35 | 45 | 60 | 70 | 80 | 110 | 180 | 240 |
| | 28 | 30 | 35 | 40 | 50 | 65 | 75 | 90 | 120 | 200 | |
| | 30 | 35 | 40 | 45 | 55 | 70 | 80 | 100 | 130 | 220 | |
| | | 40 | 45 | 50 | 60 | 75 | 90 | 110 | 140 | 240 | |
| | | | 50 | 55 | 65 | 80 | | 120 | 150 | | |
| | | | | 60 | 70 | | | 130 | 160 | | |
| | | | | | | | | 140 | 180 | | |

NOTE:-

BEND TEST AS PER IS: 549

DESIGNATION: SP-d×L
EXAMPLE: SP-8×60
SURFACE TREATMENT TOYO 53
MATERIAL STEEL 1245 AS PER SIS 14 12,45 OR SIMILAR
MINOR DIFFERENCES IN THE SHANK LENGTH ARE PERMISSIBLE
DIMENSIONS CORRESPOND TO SMS 66
DIMENSIONS UNDERLINED ex AB BOFORS STOCK
ALT MATERIAL: STEEL BS 970 PART 1: 1983, 070 M20.
OR
IS: 549: 1974
ALTERNATIVE PIN, COTTER, SPLIT TO IS 549:1961
DULY ZINC PLATED TO IS 1573:1970

| DATE | AUTHORITY | NATURE | SIG AK&P | SIG DO |
|---|---|---|---|---|
| 29 09/04 | 18883-W | HINDI NOMEN ADDED | | |
| 27-3-98 | 18429-W | ALT MATL AMENDED | | |
| 5-12-91 | 17161-W | ALT MATL AMENDED. | | |
| | | PREV DC NOS. 7507-W, 10941-W, 11493-W, 11898-W, 12504-W, 14785-W, 15355-W, 15402-W, 15417-W & 16400-W DT 24-1-86 | | |

DRG RESEALED: DC NO. 1535-W
22-5.79
FOR CQA(W)

13-8-90 TRACED | RETRACED WITHOUT CHANGE | CHECKED | C/D'MAN | DO

| UTARSOTAD KKD/ | UTGAVA | 1 | 2 | 3 | 4 | 5 | 6 | 7 | 8 | 9 | 10 |
|---|---|---|---|---|---|---|---|---|---|---|---|
| FASTSTALID KKD | MANAR | 2/40 | 3/54 | | | | | | | | |

AKTIEBOLAGET
**BOFORS**

(a) ~~GRUB SCREWS SPIGOT END~~ ग्रब स्क्रूस स्पिगॉट एन्ड टाइपः
~~TYPE: TSS, M-THREAD AS PER N2-1~~ टी एस एस, एम-थ्रेड एस पर एन 2-1 In

| | |
|---|---|
| 16 14 4 | |
| Gr 53 | N2-51 |
| 1-11-1946 | |
| 1 | |

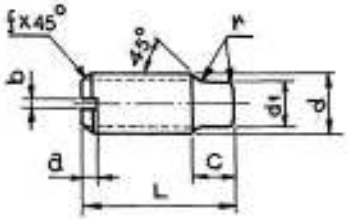


| | | | | | | | | | |
|---|---|---|---|---|---|---|---|---|---|
| a | 1 | 1·4 | 1·7 | 2 | 2·5 | 3 | 3·5 | 4 | 5 |
| b | 0·5 | 0·6 | 0·8 | 1 | 1·2 | 1·2 | 1·8 | 2·5 | 3 |
| c | 2·5 | 3 | 3 | 4 | 5 | 6 | 8 | 8 | 10 |
| f | 0·5 | 0·8 | 0·8 | 1 | 1·2 | 1·5 | 2 | 2 | 2·5 |
| r | 0·5 | 0·5 | 0·5 | 0·5 | 0·8 | 0·8 | 0·8 | 0·8 | 1 |
| d1 | 2 | 2·5 | 3·5 | 4 | 6 | 7 | 9 | 12 | 15 |
| d | 3 | 4 | 5 | 6 | 8 | 10 | 12 | 16 | 20 |
| SCREW LENGTH L | | | | | | | | | |
| | 4 | 4 | 5 | 8 | 8 | 10 | 12 | 16 | 22 |
| | 5 | 5 | 6 | 10 | 10 | 12 | 14 | 19 | 25 |
| | 6 | 6 | 8 | 12 | 12 | 14 | 16 | 22 | 30 |
| | 8 | 8 | 10 | 14 | 14 | 16 | 19 | 25 | 35 |
| | 10 | 10 | 12 | 16 | 16 | 19 | 22 | 30 | 40 |
| | 12 | 12 | 14 | 19 | 19 | 22 | 25 | 35 | 45 |
| | | 14 | 16 | 22 | 22 | 25 | 30 | 40 | 50 |
| | | | 19 | 25 | 25 | 30 | 35 | 45 | |
| | | | | 30 | 30 | 35 | 40 | 50 | |
| | | | | | | | 45 | | |

DESIGNATION : TSS – d x L

EXAMPLE : TSS – 10 X 16

GALVANISING TO BOFORS SPEC Y 054

MANUFACTURED IN TOLERANCE CLASS f, SEE TABLE N2-82

MATERIAL IN DURABILITY CLASS D 60

DIMENSIONS CONFORM WITH SMS-1423

UNDERLINED DIMENSIONS ex AB BOFORS STOCK.

ALT MATL : STEEL BS 970 Pt 1 : 1983, 080 M40 (NORM)

(a) **AMENDMENT**
(UNDER NOMENCLATURE)
SCREW GRUB SPIGOT END, TYPE-TSS,
M THREAD AS PER N2-1
WAS
GRUB SCREWS SPIGOT END, TYPE-TSS,
M THREAD AS PER N2-1

CQAW JABALPUR
G.S.N. TRACED
CHECKED
C/D' MAN

DC No. 19657-W DATED 18-04-2018

| DATE | AUTHORITY | NATURE | SIG DO | SIG AIISP |
|---|---|---|---|---|
| 29-9-04 | 18883-W | HINDI NOMEN ADDED | | |
| 30-9-02 | | RETRACED WITHOUT CHANGE | | |
| | | PREV DC Nos.7507-W, 9517-W, 12473-W, 13921-W & 17321-W/ Dt : 19-6-92 | | |

DRG SEALED PROV : DC No. 7507-W
Dt : 22-12-59

FOR EXPLANATION OF DIMENSIONING ETC., SEE CIARM NOTE SHT No. 1
FIRST ANGLE PROJECTION . DIMENSIONS ARE IN mm.

| Tolerans | Avmått |
|---|---|
| 15H9 | 0.000 +0.043 |

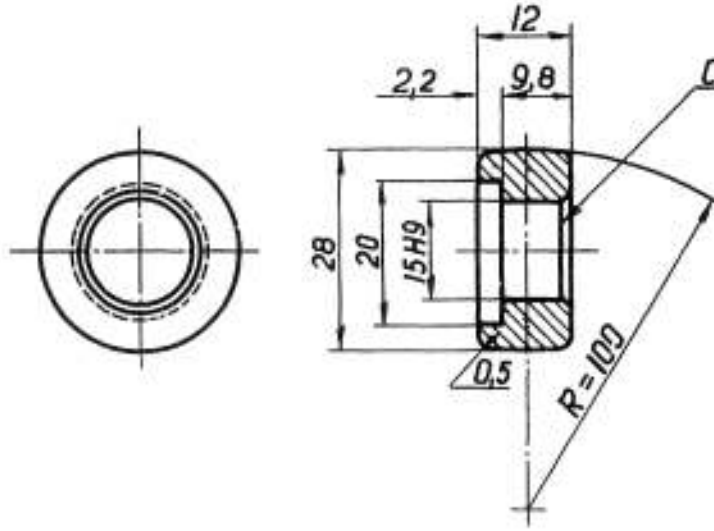


MATERIAL IN INDIA :- ~~STEEL, BS: 970 En 30 A~~ } ~~0.30-0.35 C~~
~~PROOF STRESS TESTED~~ }

~~SURFACE TREATMENT TO SPEC Y 050~~

**AMENDMENT**

(a) UNDER MATERIAL IN INDIA
BS: 970 Part 1:1983 Grade 835 M 30 H/T
with C%= 0.30-0.35
OR
IS: 5517-1993 Designation 30 Ni 13Cr5 to be hardened to Hardness 43-51 HRc
WAS
STEEL BS 970 En 30A PROOF STRESS TESTED -0.30-0.35C

(b) SURFACE TREATMENT
Y 3-11
WAS
Y 050

DC No. 19658-W, DATED 23-04-2018

| DATE | AUTHORITY | AMENDMENTS | SIG AHSP | SIG DO |
|---|---|---|---|---|
| 21-9-10 | | SCANNED & PRINTED WITHOUT CHANGE | | |

PREV DCs 7504-W, 9312-W & 18883-W DATED 29-09-04

| DRG SEALED PROV | SCANNED | CHECKED :- | HOS |
|---|---|---|---|
| 7504-W DATED 21-12-59 | MK | | |

# CQA(W). JABALPUR

| | | | | | | | | | | |
|---|---|---|---|---|---|---|---|---|---|---|
| | | | 5-935 | | 40 MM A.A. GUN L/70 HEAD Automatic Cocking Rammer | Roller रोलर | KR75-4 | | Verkt.-nr 0.04 |
| | | | 3/1 | | | Benämning | Material | Behandl. | Ber. vikt kg. |
| | | | | | | Ritad: Jäe. | Kontr.: Jäe. | Datum: 3/8-54 | Skala: 1:1 |
| DF | Nr | Grupp | DF- | Nr | Grupp | Föreg. ritn. 6139868 | | Tillk. ritn. | |

# 6144971

AB Bofors äganderätt till denna ritning är skyddad genom lagen av den 30 maj 1919. Konstruktionen eller ritningen får utan bolagets medgivande bekantgöras, kopieras eller mångfaldigas, bringas till utförande eller i övrigt obehörigen utnyttjas.

AKTIEBOLAGET BOFORS

FOR EXPLANATION OF DIMENSIONING ETC., SEE CIARM NOTE SHT No. 1
FIRST ANGLE ANGLE PROJECTION. DIMENSIONS ARE IN mm.

| Tolerans | Avmått |
|---|---|
| 8m6 | +0015 +0006 |

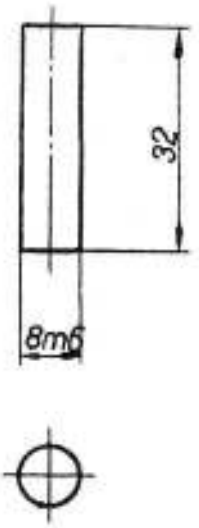


~~MATERIAL IN INDIA :- STEEL, BS: 970 En 24/T~~
~~PROOF STRESS TESTED~~

~~SURFACE TREATMENT TO SPEC Y 050~~

**AMENDMENT**
(a) UNDER MATERIAL IN INDIA
BS: 970 Part-1 -1983 Gde 817M40 'T'
OR
IS : 5517-1993, Grade 40Ni6Cr4Mo2, LRS-150 PROOF STRESS TESTED
WAS
STEEL BS 970 En 24/T PROOF STRESS TESTED

(b) SURFACE TREATMENT
Y 3-11
WAS
Y 050

DC No. 19658-W, DATED 23-04-2018

| | | | | |
|---|---|---|---|---|
| | | SCANNED & PRINTED WITHOUT CHANGE | | |
| DATE | AUTHORITY | AMENDMENTS | SIG AHSP | SIG DO |

PREV DCs : 7504-W, 9312-W & 18883-W DATED 29-09-04

| DRG SEALED PROV :- | SCANNED | CHECKED | HOS |
|---|---|---|---|
| 7504-W DATED 21-12-59 | MK | GSN | |

# CQA(W). JABALPUR

| | | | | | | | | | | |
|---|---|---|---|---|---|---|---|---|---|---|
| | | | 5-935 3/1 | | 40 MM A.A. GUN L/70 Head, Automatic Cocking, Rammer | Pin पिन | | FR86 | To be hardened | Verkt.-nr 0.01 |
| | | | | | | Benämning | | Material | Behandl. | Ber. vikt kg. |
| | | | | | | Ritad | Kontr. | Datum | Skala | 6128642 |
| | | | | | | Who | | 256-51 | 1:1 | |
| DF- | Nr | Grupp | DF- | Nr | Grupp | Föreg. ritn. | | | Tillk. ritn. | |

AB Bofors äganderätt till denna ritning är skyddad genom lagen av den 30 maj 1919. Konstruktionen eller ritningen får ej utan bolagets medgivande bekantgöras, kopieras eller mångfaldigas, bringas till utförande eller i övrigt obehörigen utnyttjas.

AKTIEBOLAGET BOFORS

FOR EXPLANATION OF DIMENSIONING ETC. SEE CIARM NOTE SHT No. 1
FIRST ANGLE PROJECTION. DIMEMENSIONS ARE IN mm.

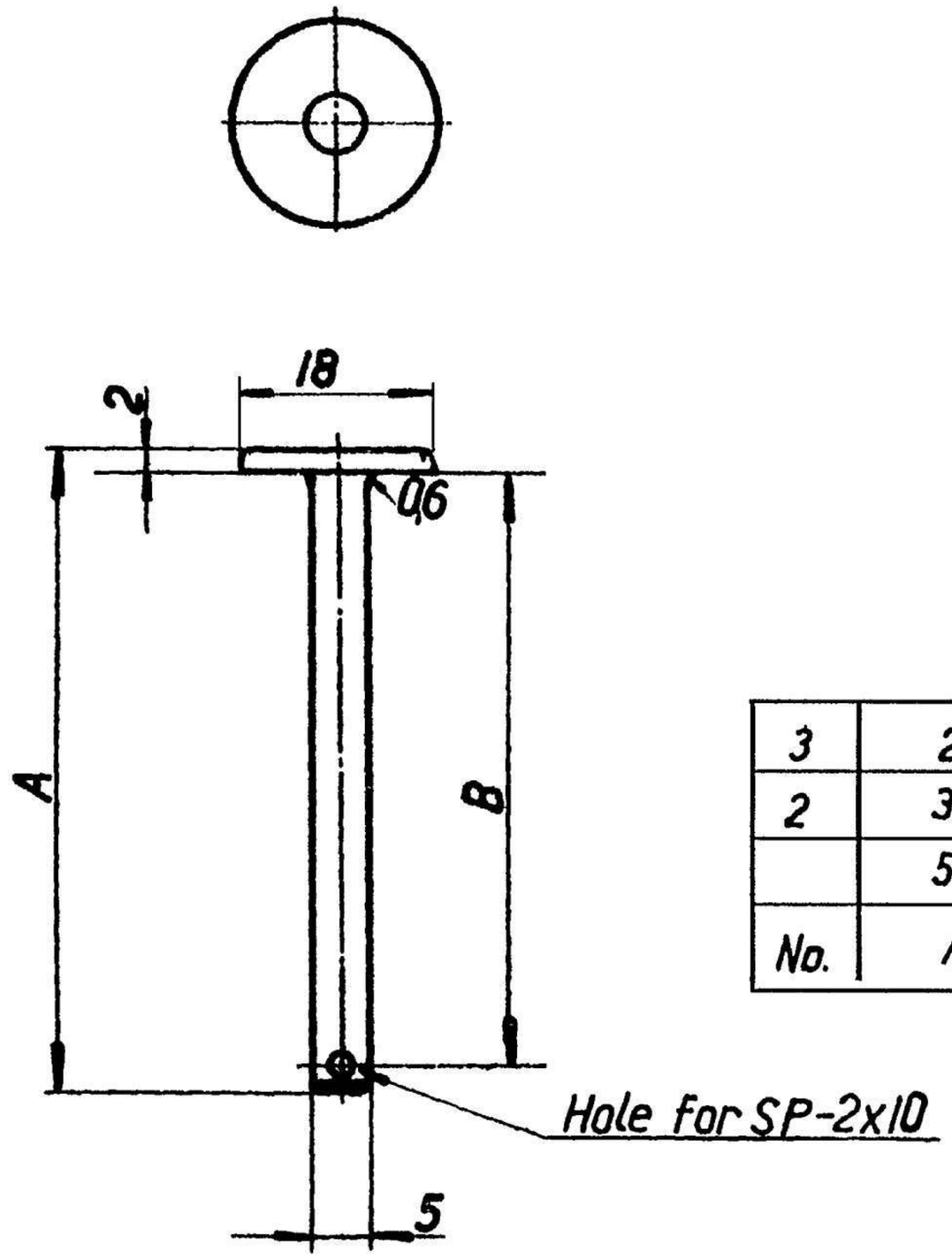


गुणता आश्वासन नियंत्रालय (शस्त्र)
जबलपुर(म प्र)

| | | | |
|---|---|---|---|
| 3 | 21 | 17 | 0,01 |
| 2 | 34 | 30 | 0,01 |
| | 59 | 55 | 0,016 |
| No. | A | B | weight kg |

ALT. MATERIAL :- ~~STEEL, BS: 970, PART 1; 1983, GRADE 080 M 50 (NORM).~~

SURFACE TREATMENT TO SPEC Y 050.

**AMENDMENT**
UNDER ALT MATL
BS : 970 Part-1 -1983 Gde 070M55 ( Norm )
OR
IS : 2004-1991, Class 4, Designation 45C8
WAS
STEEL BS:970 , PART 1, 1983 GRADE 080 M 50 ( NORM)

DC No. 19619-W, DATED 21-10-2017

| DATE | AUTHORITY | AMENDMENTS | SIG AHSP | SIG DO |
|---|---|---|---|---|
| 07-05-10 | | SCANNED & PRINTED WITHOUT CHANGE | | |

PREV DCs :- 7495-W, 9312-W, 17643-W & 18883-W DATED 29-09-04.

| DRG SEALED PROV :- | SCANNED - MK | CHECKED :-GSN | JTO (D) |
|---|---|---|---|
| 7495-W DATED 15-12-59 | | | |

# CQA(W), JABALPUR

| | | | | | | | | | | |
|---|---|---|---|---|---|---|---|---|---|---|
| 5-935 3/1 | | 40 MM A.A. GUN L/70 Head Automatic Cocking, Rammer | 5935 2/4 | | 40 MM A.A. GUN L/70 Hopper, automatic | Pin पिन | | B10 | | Verkt.-nr |
| | | | | | | Benämning | | Material | Behandl. | Ber vikt kg |
| | | | | | | Ritad | Kontr. | Datum | Skala | 6110089 |
| | | | | | | Bev | Seng | 28.2.49 | 1:1 | |
| DF- | Nr | Grupp | DF- | Nr | Grupp | Föreg. ritn | | | | Tillk. ritn. |

AB Bofors äganderätt till denna ritning är skyddad genom lagen av den 30 maj 1919. Konstruktionen eller ritningen får ej utan bolagets medgivande bekantgöras, kopieras eller mångfaldigas, bringas till utförande eller i övrigt obehörigen utnyttjas.

AKTIEBOLAGET BOFORS

FOR EXPLANATION OF DIMENSIONING, ETC., SEE CI ARM NOTE SHEET No.1

FIRST ANGLE PROJECTION. DIMENSIONS ARE IN mm.

| Toleranz | Avmått |
|---|---|
| 15e8 | -0,032<br>-0,059 |

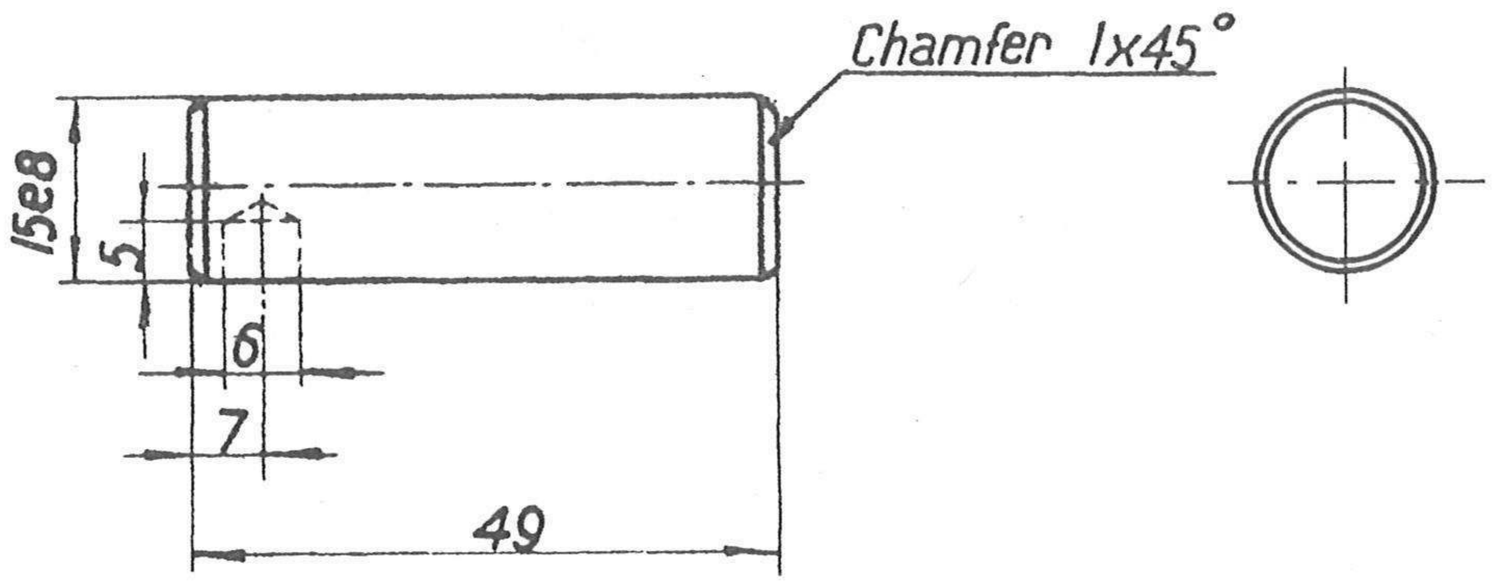


MATL IN INDIA :- BS : 970 Pt-1-1983 GDE 080 M 30 (NORM)

OR IS: 2004 1991, CLASS 3 DESIGN 30 C8

SURFACE TREATMENT TO SPEC Y 3-11

| DATE | AUTHORITY | AMENDMENTS | SIG AHSP | SIG DO |
|---|---|---|---|---|
| 18-05-17 | 19598-W | MATL IN INDIA & SURFACE TREATMENT AMENDED | | |
| 16-2-10 | | SCANNED & PRINTED WITHOUT CHANGE | | |

PREV DCs :- 7504-W, 9312-W & 18883-W DATED 29-09-04.

| DRG SEALED PROV :- 7504-W DATED 21-12-59 | SCANNED - MK | CHECKED :- P.R.Vaz | C'D/MAN |
|---|---|---|---|

# CQA(W) JABALPUR

| DF- | Nr | Grupp | DF- | Nr | Grupp |
|---|---|---|---|---|---|
| | | | 5-935 | | 40 MM A.A. GUN L/70 |
| | | | 3/1 | | Head, Automatic Cocking. Rammer |

पिन

Pin

Benämning

| Material | Behandl. | Ber. vikt kg |
|---|---|---|
| B7 | | |

Verkt.-nr 007

| Ritad | Kontr. | Datum | Skala |
|---|---|---|---|
| Cno | Eng. | 24.47 | 1:1 |

Foreg. ritn

Tillk. ritn.

6095848

Å Bofors äganderatt till denna ritning är skyddad genom lagen av den 30 maj 1919. Konstruktionen eller ritningen får ej utan bolagets medgivande bekantgöras, kopieras eller mångfaldigas, bringas till utförande eller i övrigt obehörigen utnyttjas.

AKTIEBOLAGET BOFORS

FOR EXPLANATION OF DIMENSIONING ETC, SEE CI ARM NOTE SHT No. 1
FIRST ANGLE PROJECTION DIMENSIONS ARE IN mm

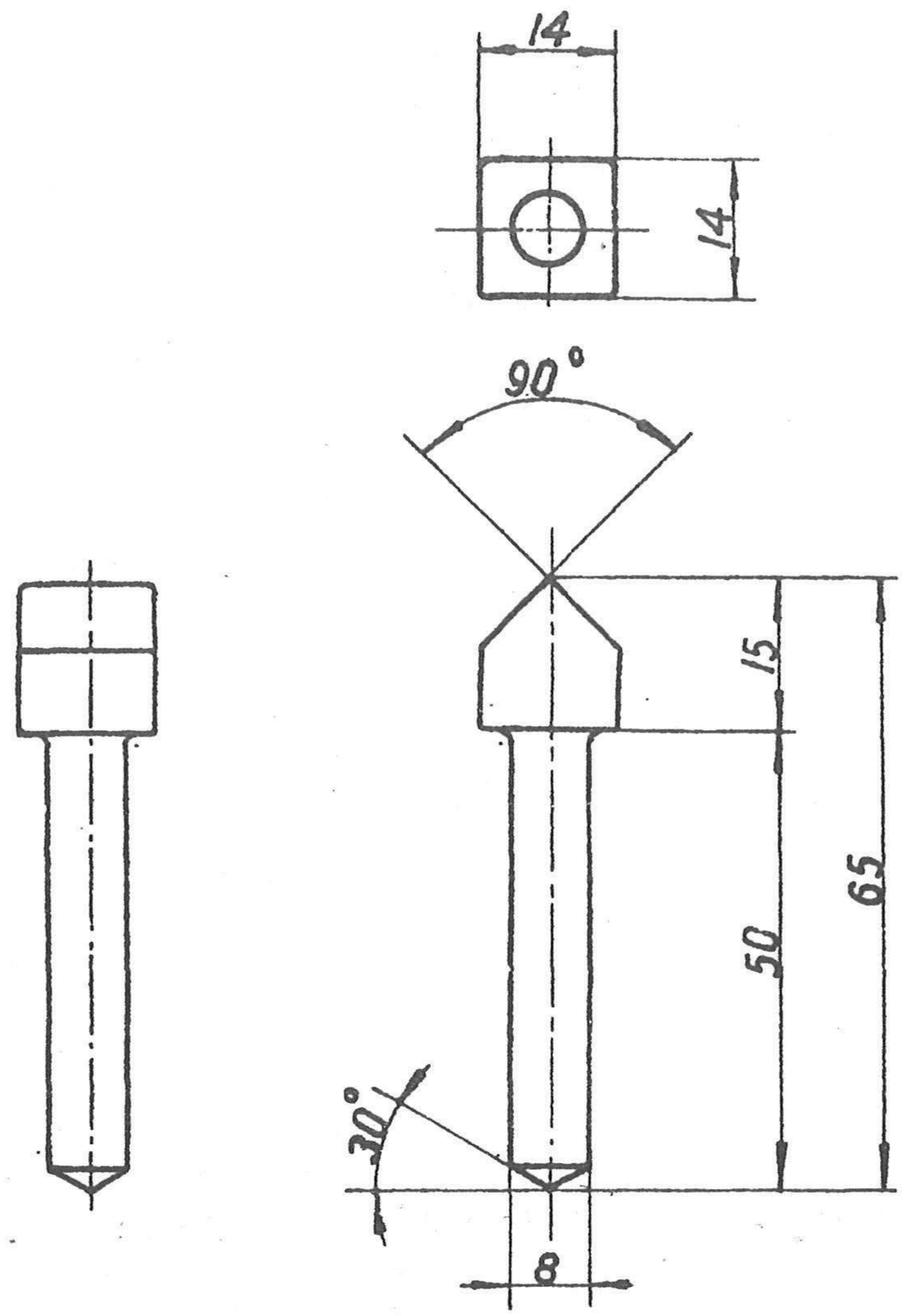


ALT MATL :-

BS:970 PART-1-1983 GDE 070M55 (NOR)

OR IS:2004-1991, CLASS 4, DESIGNATION 45C8.

SURFACE TREATMENT TO SPEC Y 3-11

| DATE | AUTHORITY | AMENDMENTS | SIG AHSP | SIG DO |
|---|---|---|---|---|
| 18-05-17 | 19598-W | ALT MATL & SURFACE TREATMENT AMENDED | | |
| 27-01-10 | | SCANNED & PRINTED WITHOUT CHANGE | | |

PREV DCs :-
7504-W, 9312-W, 12824-W & 18883-W DATED 29-09-04.

| DRG SEALED PROV :- | SCANNED - MK | CHECKED :- JLC | C'D/MAN |
|---|---|---|---|
| 7504-W DATED 21-12-59 | | | |

# CQA(W) JABALPUR

| DF- | Nr | Grupp | DF- | Nr | Grupp | | | | | | |
|---|---|---|---|---|---|---|---|---|---|---|---|
| | | | 5-935 | | 40 MM A.A. GUN L/70 Head, Automatic Cocking. Rammer. | Plunger प्लन्जर | | | B10 | To be hardened | Verkt.-nr 403 |
| | | | 3/1 | | | Benämning | | | Material | Behandl. | Bär. vikt kg |
| | | | | | | Ritad | Kontr. | Datum | Skala | 6095847 | |
| | | | | | | CNO | Leig. | 2.4.47 | 1:1 | | |
| DF- | Nr | Grupp | DF- | Nr | Grupp | Föreg. ritn. | | | | Tillk. ritn. | |

AB Bofors äganderätt till denna ritning är skyddad genom lagen av den 30 maj 1919 Konstruktionen eller ritningen får ej utan bolagets medgivande bekantgöras, kopieras eller mångfaldigas, bringas till utförande eller i övrigt obehörigen utnyttjas.

AKTIEBOLAGET BOFORS

FOR EXPLANATION OF DIMENSIONING, ETC., SEE CI ARM NOTE SHEET No.1
FIRST ANGLE PROJECTION. DIMENSIONS ARE IN mm.

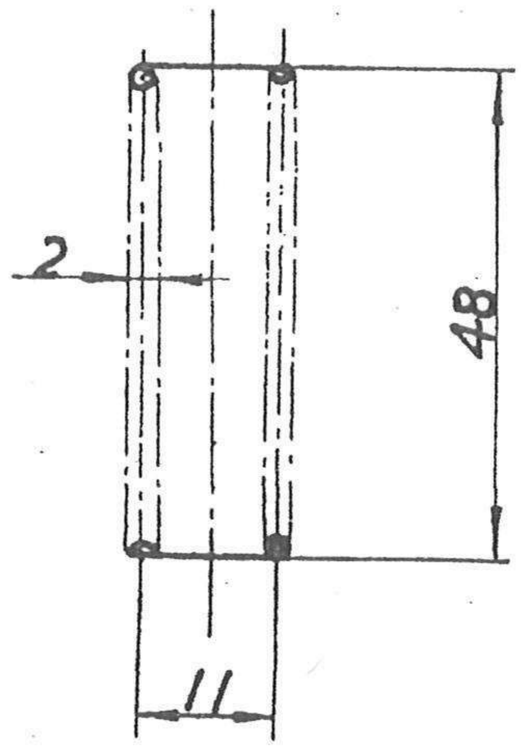


Total no. of coils = 14,5

Full load = 12 ± 1 kg with L = 36 mm.

SEE SPEC A 6001 & A 6018 (a)

ALT MATERIAL :-

BS: 5216-1991 CODE ND GRADE 3 OR DEF 106

OR

IS: 4454(PART 1) - 2001 GRADE DM.

SURFACE TREATMENT TO SPEC Y 3-11.

| DATE | AUTHORITY | AMENDMENTS | SIG AHSP | SIG DO |
|---|---|---|---|---|
| 18-05-17 | 19598-W | ALT. MATL. & SURFACE TREATMENT AMENDED | | |
| 16-2-10 | | SCANNED & PRINTED WITHOUT CHANGE | | |

PREV DCs:-
7504-W, 9312-W, 11311-W, 11513-W, 11859-W, 11925-W, 17328-W & 18883-W DATED 29-09-04.

| DRG SEALED PROV :- | SCANNED - MK | CHECKED :- P.R.V | C'D/MAN |
|---|---|---|---|
| 7504-W DATED 21-12-59 | | | |

# CQA(W) JABALPUR

| DF- | Nr | Grupp | DF- | Nr | Grupp | Benämning | Material | Behandl. | Ber. vikt kg |
|---|---|---|---|---|---|---|---|---|---|
| | | | 5-935 3/1 | | 40 MM A.A. GUN L/70 Head, Automatic Cocking. Rammer | Spring स्प्रिंग | Spring steel | | Verkt.-nr 0,01 |

| Ritad | Kontr. | Datum | Skala |
|---|---|---|---|
| Gna | Seng | 2.4.47 | 1:1 |

Förep. ritn.

Tillk. ritn.

6095846

AB Bofors äganderätt till denna ritning är skyddad genom lagen av den 30 maj 1919. Konstruktionen eller ritningen får ej utan bolagets medgivande bekantgöras, kopieras eller mångfaldigas, bringas till utförande eller i övrigt obehörigen utnyttjas.

AKTIEBOLAGET BOFORS

FOR EXPLANATION OF DIMENSIONING ETC., SEE CIARM NOTE SHT No. 1
FIRST ANGLE PROJECTION. DIMENSIONS ARE IN mm

| Tolerans | Avmått |
|---|---|
| 14 E9 | +0,032 +0,075 |
| 8 H8 | 0,000 +0,022 |
| 15 H8 | 0,000 +0,027 |
| 13 e 8 | -0,032 -0,059 |
| 24 e 8 | -0,040 -0,073 |

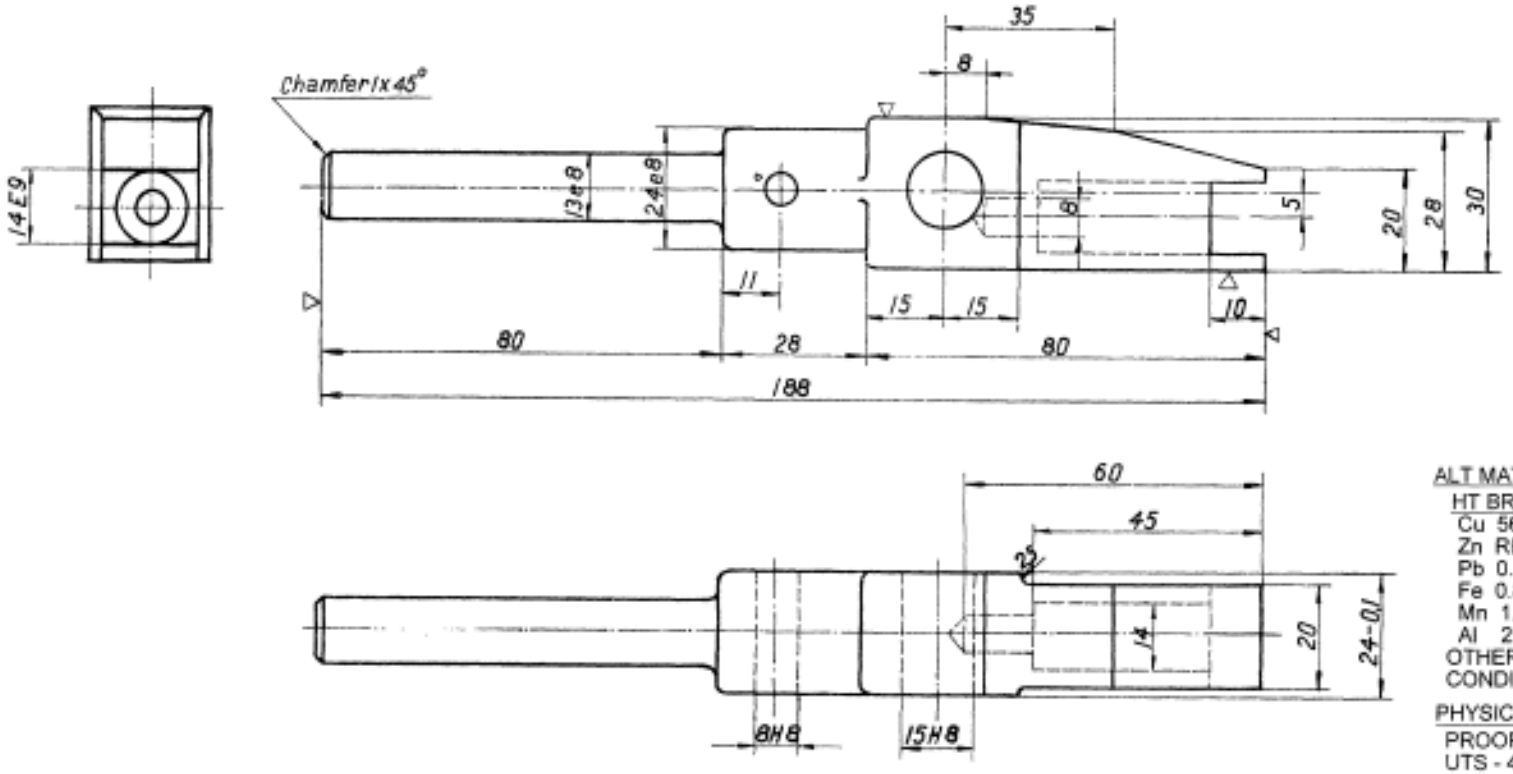


ALT MATERIAL : -
HT BRASS CHEMICAL COMPOSITION
Cu 56/62 %
Zn REM %
Pb 0.1 %
Fe 0.8 - 1.3 %
Mn 1.5 - 2.2 %
Al 2.8 - 3.2 %
OTHER ELEMENTS 0.1 %
CONDITION - EXTRUDED

PHYSICAL PROPERTIES
PROOF STRESS - 20 TSI
UTS - 40 TSI
ELONGATION - 15 %

| | | | | | | | | | | | |
|---|---|---|---|---|---|---|---|---|---|---|---|
| 2-2-11 | | SCANNED AND PRINTED WITHOUT CHANGE | | | 40 MM A.A. GUN L/70 Head, Automatic Cocking, Rammer | Plunger प्लन्जर | | BML 21 | | HK-4243 |
| DATE | AUTHORITY | AMENDMENTS | SIG AHSP | SIG DO | | Benämning | | Material | Beteckn. | Verkt.-nr 0.4 |
| PREV. DCs: 7504-W, 15405-W, 17362-W & 18883-W DATED 29-09-04 | | | | | 5-935 3/1 | Ritad | Kontr. | Datum | Skala | Ber. vikt kg |
| ORG SEALED PROV :- 7504-W DT-21-12-59 | | SCANNED MK | CHECKED | HOS | | Cng | | | 1:1 | 5057607 |
| | | | | | | DF- | Lä | Grupp | DF- | Nr | Grupp | Anteg. nr 5044549 | Tillk. nr |

AB Bofors oganderätt till denna ritning är skyddad enligt lagen av den 30 maj 1919. Konstruktionen eller ritningen får ej utan bolagets medgivande bekantgöras, kopieras eller mångfaldigas, lämnas till utförande eller i övrigt obehörigen utnyttjas

CQA(W), JABALPUR

AKTIEBOLAGET BOFORS

FOR EXPLANATION OF DIMENSIONING ETC, SEE CI ARM NOTE SHT No. 1
FIRST ANGLE PROJECTION DIMENSIONS ARE IN mm

| Tolerans | Avmätt |
|---|---|
| 13H9 | 0,000 +0,043 |
| 24H9 | 0,000 +0,052 |
| 15e8 | -0,032 -0,059 |

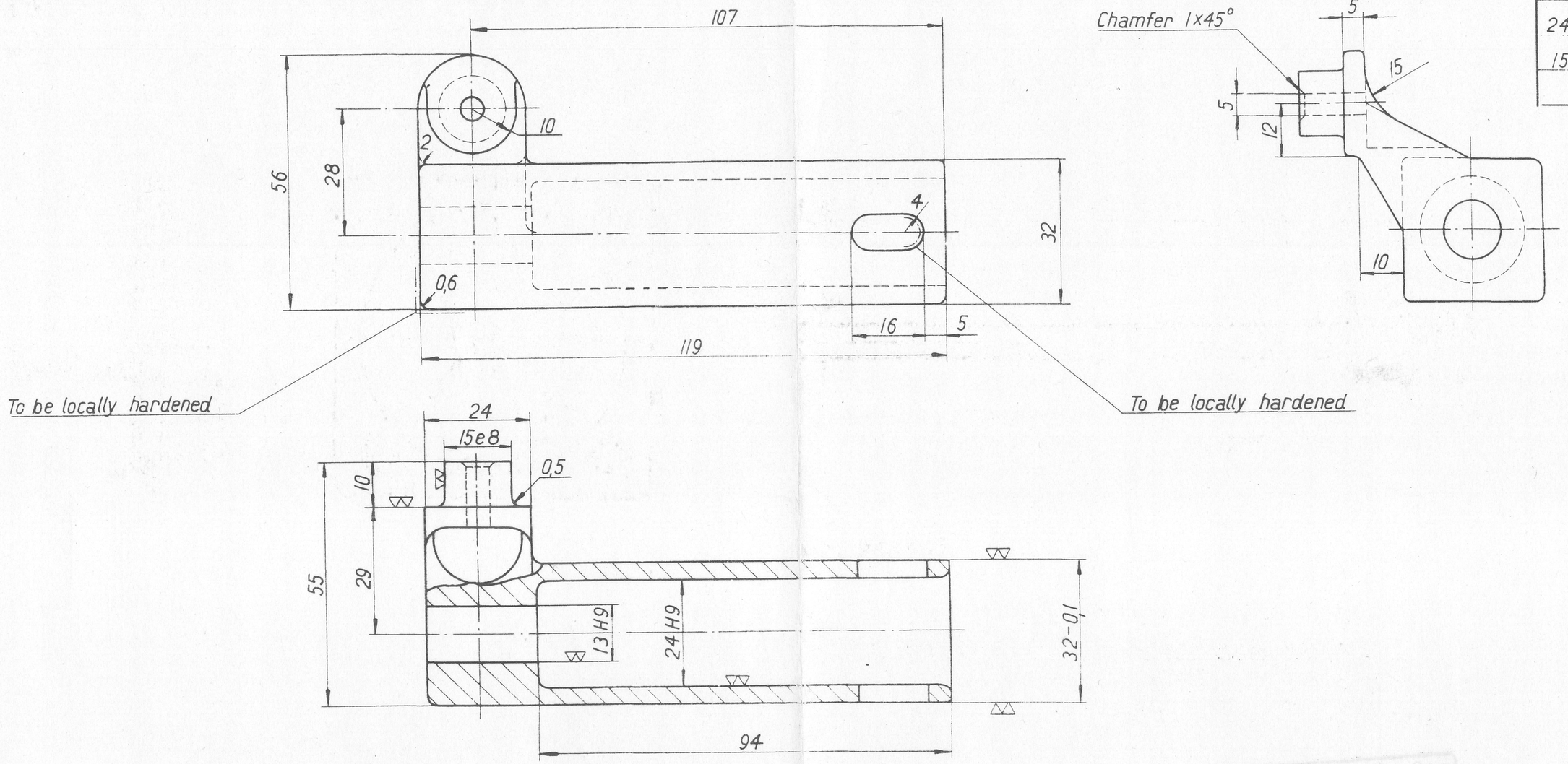


ALT MATL :- BS: 970 PART-1-1983 GDE 835 M 30, H/T WITH C% = 0.30-0.35 & HARDNESS - 260 TO 300 HB.

SURFACE TREATMENT TO SPEC Y3-11

| DATE | AUTHORITY | AMENDMENTS | SIG AHSP | SIG DO |
|---|---|---|---|---|
| 8.8.16 | 19519-W | ALT MATL & SURFACE TREATMENT AMENDED | | |
| 21.2.11 | | SCANNED & PRINTED WITHOUT CHANGE | | |

PREV DCs : 7504-W,9312-W,14963-W,15061-W & 18883-W DT 29-9-04

DRG SEALED PROV :-7504-W DT 21-12-59 | SCANNED PKA | CHECKED | HOS

CQA(W). JABALPUR

| DF | Nr | Grupp | DF | Nr | Grupp | Benämning | Material | Behandl | Ber vikt kg |
|---|---|---|---|---|---|---|---|---|---|
| | | | 5-935 3/1 | | 40 MM A.A. GUN L/70 Head Automatic Cocking Rammer | Head हेड | KR 75 | To be locally hardened | Verkt nr 0,75 |

| Ritad | Kontr. | Datum | Skala |
|---|---|---|---|
| | Eds | 3-8.54 | 1:1 |

5055554

Foreg ritn 5064050 | Tillk ritn

AB Bofors äganderätt till denna ritning är skyddad genom lagen av den 30 maj 1919. Konstruktionen eller ritningen får ej utan bolagets medgivande bekantgöras, kopieras eller mångfaldigas, bringas till utförande eller i övrigt obehörigen utnyttjas.

AKTIEBOLAGET BOFORS

FOR EXPLANATION OF DIMENSIONING, ETC., SEE CLARK NOTE SHEET No 1
FIRST ANGLE PROJECTION DIMENSIONS ARE IN MILLIMETRES

| Ändr nr | Ändring | Begärd av | Datum | Signatur |
|---|---|---|---|---|
| | 1984-W 21-12-89 BRS SEALED PROV | | | |
| | PREV DTC No 9212-W 27-2-86 | | | |
| | 1887B-W 22-3-90 MATL. AMENDED | | | |

| Tolerans | Anmärk |
|---|---|
| 7 H8 | +0,015 0 |
| 25 H8 | +0,033 0 |
| 64 H8 | +0,046 0 |
| 12 h 8 | 0,000 -0,027 |
| 15 H8 | 0,000 +0,027 |

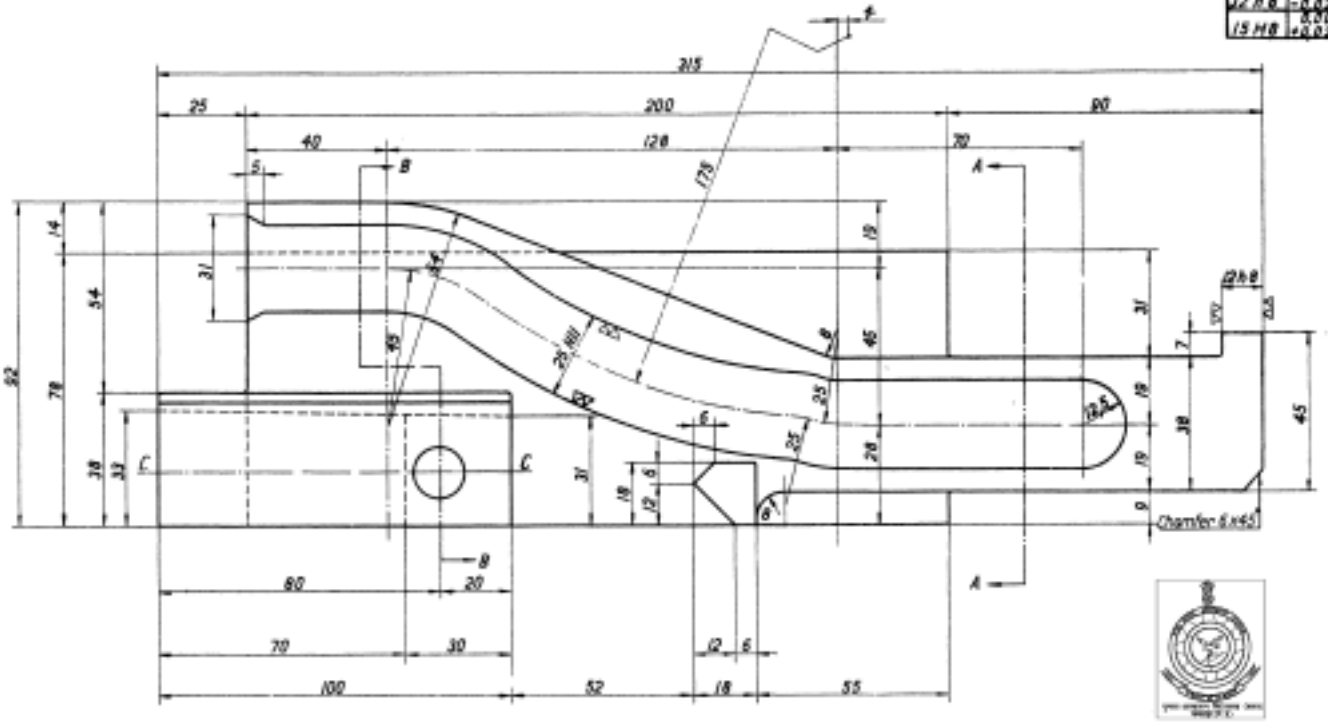


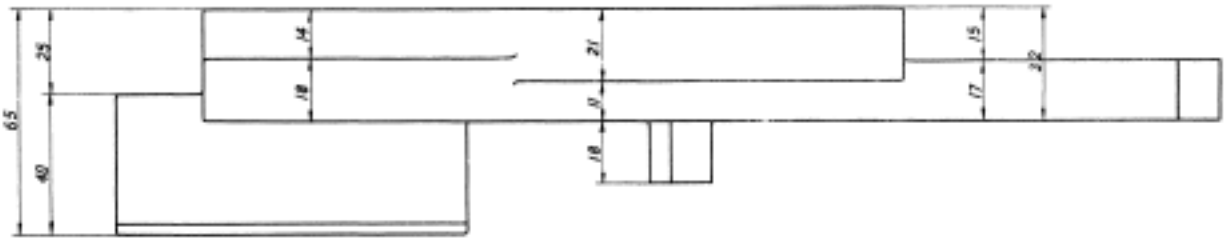


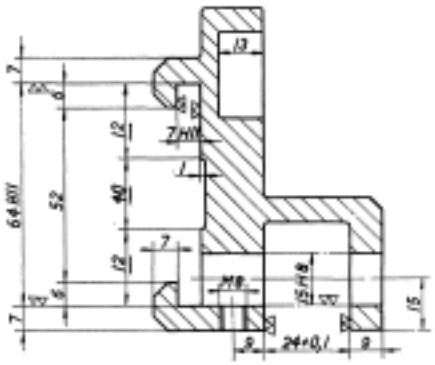


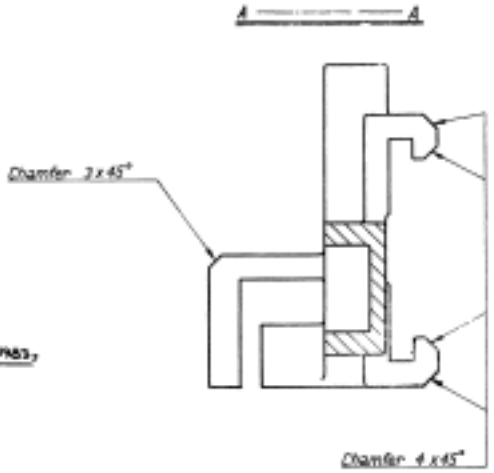


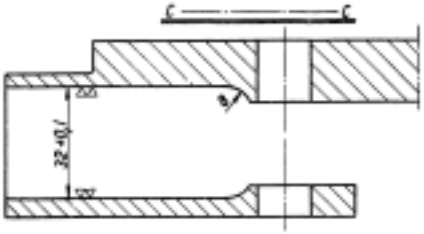


ALT MATL:-
STEEL BS 970 PART 1. 983,
835 M 30 (3)

SURFACE TREATMENT TO SPEC Y 050

| | | | | | | | | | |
|---|---|---|---|---|---|---|---|---|---|
| | | | | 5-916 3° | 40 MM A A GUN L/70 Head, Automatic Locking Assembly | कैम प्लेट लेफ्ट Cam-plate, left | KN 75-4 | | UK-4240 2,55 |
| | | | | | | Benämning | Nr. ritn. | Ersätter | Ant. vikt kg |
| | | | | | | Ritad Konstr. Datum Utgåva | 4018139 | | |
| | | | | | | Cog [illegible] 2-4-87 1:1 | | | |
| Ers. | Ers. | Ers. | Ers. | Ers. | Ers. | Tillverkningsanvisning | Ers. | | |

AB Bofors egendomsrätt till denna ritning är skyddad genom lagen om den 30 maj 1919. Exemplar av denna ritning får ej utan Bofors medgivande kopieras eller på annat sätt mångfaldigas. Den får ej heller utlämnas till obehörig.

•B• AKTIEBOLAGET BOFORS •B•

| | | | |
|---|---|---|---|
| 22-11-16 | GLASFIBRID CLOTH NEG REPLACED | | AMBP |
| 24-4-86 | CHECKED | CHRIS O'HAN | |
| | | | |

| | | |
|---|---|---|
| 1887B-W 29-3-04 | HINDI NOMEN ADDED | |

E
IN

| AKTIEBOLAGET BOFORS | वाशर स्पेसिंग मेट्रिक साइज<br>WASHER SPACING METRIC SIZES | REG 16 16 |
|---|---|---|
| KKD/ | In | GR 60 N5-15 |
| | | DATUM 10-5-49 |
| | | ANTAL BLAD / BLAD NR |

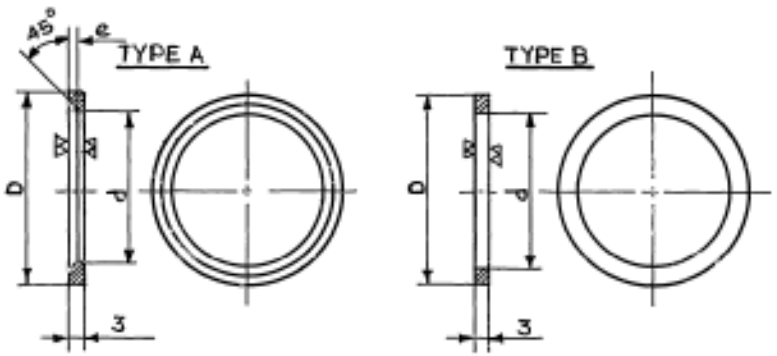


| d | D | e | TOLERANCES d | TOLERANCES D | wt GRAM TYPE B |
|---|---|---|---|---|---|
| 10 | 15 | 1.2 | +0·1 / +0·3 | 0·0 / −0·1 | 2·3 |
| 12 | 18 | 1·5 | +0·1 / +0·3 | 0·0 / −0·1 | 3·3 |
| 15 | 21 | 1·5 | +0·1 / +0·3 | 0·0 / −0·1 | 4 |
| 17 | 24 | 1·5 | +0·1 / +0·3 | 0·0 / −0·1 | 5·3 |
| 20 | 27 | 1·5 | +0·15 / +0·40 | 0·0 / −0·15 | 6 |
| 25 | 32 | 1·5 | +0·15 / +0·40 | 0·0 / −0·15 | 7·4 |
| 30 | 38 | 2 | +0·15 / +0·40 | 0·0 / −0·15 | 10 |
| 35 | 44 | 2 | +0·2 / +0·5 | 0·0 / −0·2 | 13 |
| 40 | 50 | 2 | +0·2 / +0·5 | 0.0 / −0·2 | 16·6 |
| 45 | 55 | 2 | +0·2 / +0·5 | 0·0 / −0·2 | 18·5 |
| 50 | 60 | 2 | +0·2 / +0·5 | 0·0 / −0·2 | 20·4 |

DESIGNATION :— N5-15-d×D TYPE

EXAMPLE :— N5-15-20×27A

SURFACE TREATMENT TO Y 050

MATERIAL :— COLD-DRAWN POLISHED STEEL TUBE C= 0·15%

THE DIMENSIONS UNDERLINED ARE MANUFACTURED AND STOCKED IN WIDTH 33mm AFTER WHICH THE WIDTH IS ADJUSTED ON ASSEMBLY

ALT MATL :— STEEL TUBE, BS 6323, Pt 4 : 1982, DESIGNATION CFS 3, CONDITION NBK.

| | | | | |
|---|---|---|---|---|
| 29·9·04 | 18883-W | HINDI NOMEN ADDED | | [signature] |
| | | PREV DC Nos 7507-W, 11314-W, 14784-W & 17413-W DT 3-10-32 | | |
| DATE | AUTHORITY | NATURE | SIG DO | SIG AHSP |

DRG SEALED PROV :— DC No 7507-W/ DATE 22-12-59

D O CQA(W)

| | | | |
|---|---|---|---|
| 7-8-79 | SR SINGH TRACED | G.P. Shukla CHECKED | Daddikal C/D'MAN | [signature] D O | AHSP |

RETRACED WITHOUT CHANGE

E

329 B

| PART No. | |
|---|---|
| IAN 55 SA | FOR EXPLANATION OF DIMENSIONING ETC, SEE C.I.A. RM NOTE SHT NO.1<br>DIMNS ARE IN MM |

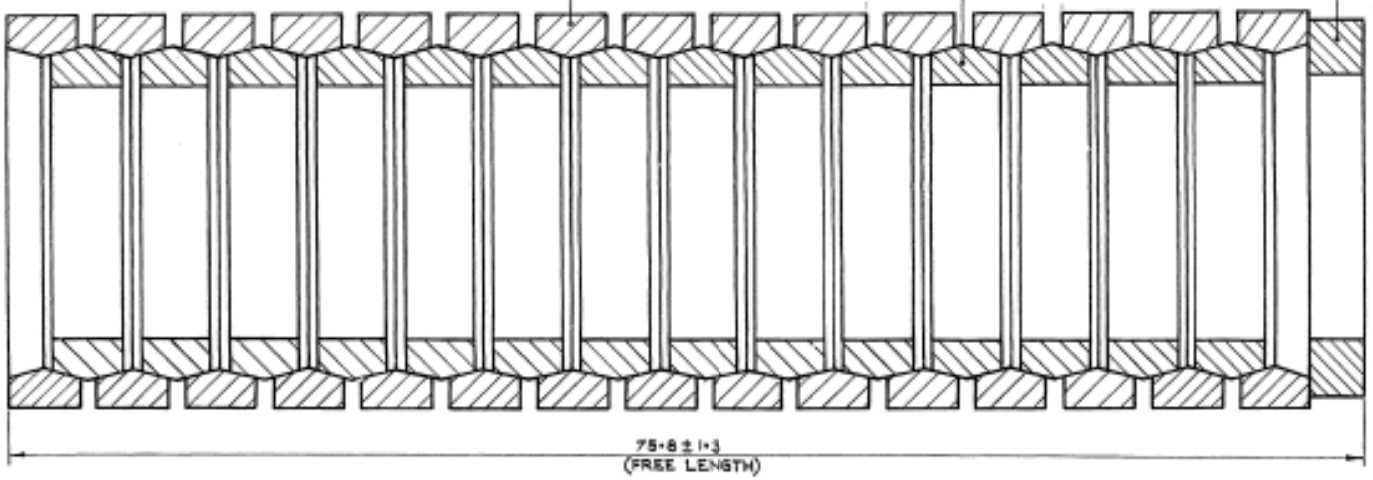

ACTUAL SIZE

| DATE | AUTHORITY | ZONE | AMENDMENTS | BD AHSP | BD DO |
|---|---|---|---|---|---|
| 14-09-07 | | | SCANNED & PRINTED WITHOUT CHANGE | | |

PREV DC Nos.-15379-W & 16883-W DATED 29-09-04

DRG SEALED:-15379-W Dt. 22-07-76

DO CQA(W)

| | | | |
|---|---|---|---|
| DRAWN:- | CHD:- | ASSY DRG:- IAN 33 A | CQA(W), JABALPUR |
| SCANNED:- SKB | CHD:- | DATE:- | |
| CIDMAN | DO | AHSP FOR CQA(W) | SCALE:- 1:1 & 5:1 |
| MATERIAL:- | | ESTD mass:- | DESIGN No. CIA / WPN / 183 |
| PROTECTIVE FINISH:- | | | PART No. IAN 55 SA |
| RING - SPRING<br>रिंग-स्प्रिंग | | | DS CAT No. |

FOR EXPLANATION OF DIMENSIONING, ETC., SEE CI ARM NOTE SHEET No.1

FIRST ANGLE PROJECTION. DIMENSIONS ARE IN mm.

| Tolerans | Avmått |
|---|---|
| 14 H 9 | 0,000 +0,043 |
| 4j 7 | +0,009 -0,003 |

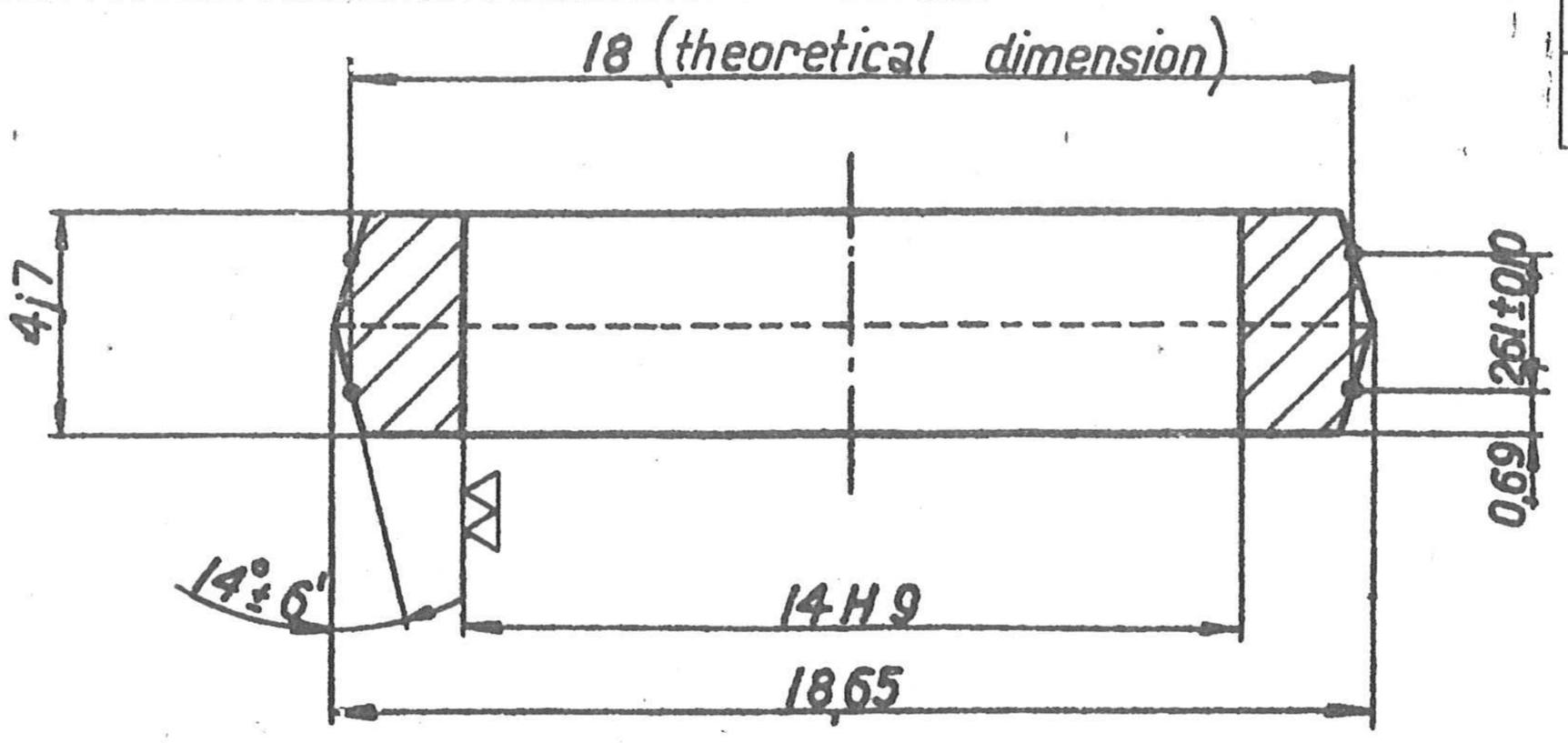


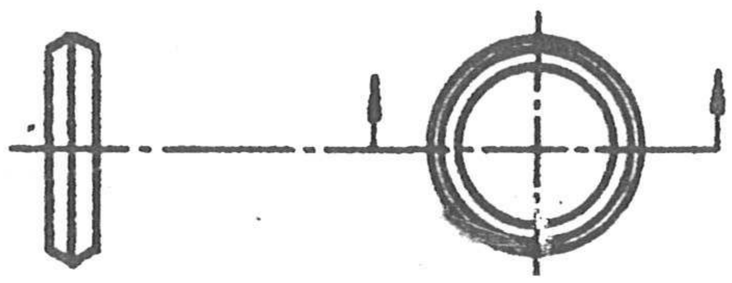

Full load = 850 ± 170 kg.

Stress = 83 kg/mm²

Deflection = 0,26 mm

Test specification B 6020 – 3

HEAT TREATMENT

(1) HARDENED AND TEMPERED TO VPN 450 TO 550

(2) STRESS RELIEVE AT 220° TO 240° C.

NOTE :- FOR FINAL TEST SEE IAN 55 SA

~~MATERIAL IN INDIA:- IS:2507-1975 GRADE 9 DESIGNATION 55Si6~~ (a)

(a) **AMENDMENT**
UNDER MATL IN INDIA
IS:2507-1975 Grade 9 Designation 55Si7
WAS
IS:2507-1975 Grade 9 Designation 55Si6

DC No. 19640-W, DATED 05-01-2018

| DATE | AUTHORITY | AMENDMENTS | SIG AHSP | SIG DO |
|---|---|---|---|---|
| 18-05-17 | 19598-W | MATL IN INDIA AMENDED | | |
| 18-02-10 | | SCANNED & PRINTED WITHOUT CHANGE | | |

PREV DCs :- 7504-W, 9312-W, 15381-W & 18883-W DATED 29-09-04

DRG SEALED PROV :- 7504-W DATED 21-12-59 | SCANNED - MK | CHECKED :- | C'D/MAN

# CQA(W) JABALPUR

| DF- | Nr | Grupp | DF- | Nr | Grupp | Benamning | Material | Behandl. | Verkt.-nr |
|---|---|---|---|---|---|---|---|---|---|
| | | | 5-935 3/1 | | 40 MM A.A. GUN L/70 Head, Automatic Cocking. Rammer. | Ring रिंग | S 145 VF | To be hardened | 0003 |

| R tad | Kontr. | Datum | Skala | Ber. vikt kg. |
|---|---|---|---|---|
| | | 5-952 | 1:1 5:1 | |

Foreg. ritn

Tillk. ritn.

6095845

AB Bofors äganderätt till denna ritning är skyddad genom lagen av den 30 maj 1919. Konstruktionen eller ritningen får ej utan bolagets medgivande bekantgöras, kopieras eller mangfaldigas, bringas till utförande eller i övrigt obehörigen utnyttjas

AKTIEBOLAGET BOFORS

FOR EXPLANATION OF DIMENSIONING, ETC., SEE CI ARM NOTE SHEET No.1
FIRST ANGLE PROJECTION. DIMENSIONS ARE IN mm.

| Tolerans | Avmått |
|---|---|
| 22 h 9 | 0,000<br>-0,052 |
| 4 j 7 | +0,009<br>-0,003 |

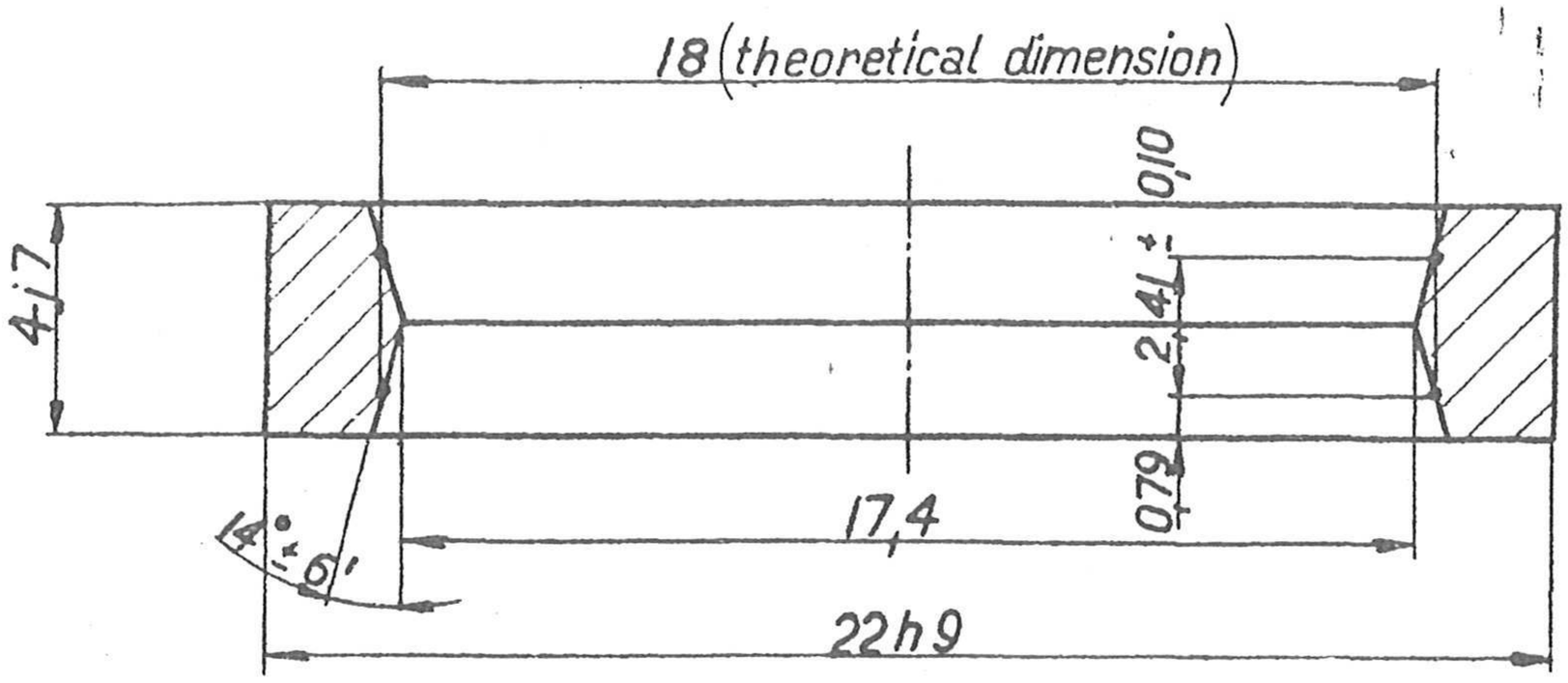


Test specification B 6020 - 3

Full load = 850 ± 170kg.

Stress= 83 kg/mm²

Deflection = 0,32 mm

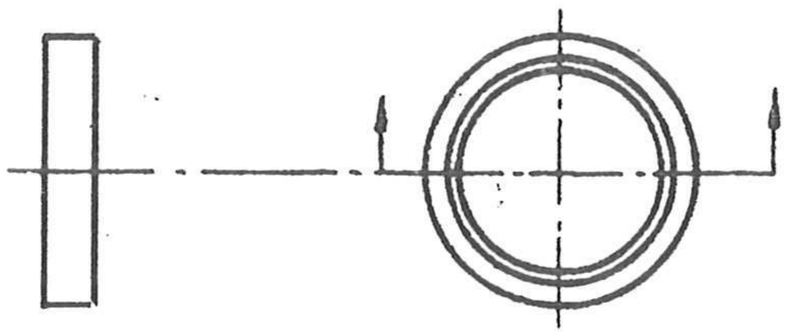

MATERIAL IN INDIA :- ~~IS:2507-1975 GRADE 9 DESIGNATION 55 Si6~~ (a)

NOTE:- FOR FINAL TEST SEE IAN 55 SA.

HEAT TREATMENT

(1) HARDENED AND TEMPERED TO VPN 450 TO 550.

(2) STRESS RELIEVE AT 220°C TO 240 ° C.

(a) **AMENDMENT**
UNDER MATL IN INDIA
IS:2507-1975 Grade 9 Designation 55Si7
WAS
IS:2507-1975 Grade 9 Designation 55Si6

DC No. 19640-W, DATED 05-01-2018

| DATE | AUTHORITY | AMENDMENTS | SIG AHSP | SIG DO |
|---|---|---|---|---|
| 18-05-17 | 19598-W | MATL IN INDIA AMENDED | | |
| 16-2-10 | | SCANNED & PRINTED WITHOUT CHANGE | | |

PREV DCs :- 7504-W, 9312-W, 15381-W & 18883-W DATED 29-09-04

| DRG SEALED PROV :- | SCANNED - MK | CHECKED :- P.R.Vaidya | C'D/MAN |
|---|---|---|---|
| 7504-W DATED 21-12-59 | | | |

# CQA(W) JABALPUR

| DF- | Nr | Grupp | DF- | Nr | Grupp | Benämning | | | | Material | Behandl. | Ber. vikt kg. |
|---|---|---|---|---|---|---|---|---|---|---|---|---|
| | | | 5-935 3/1 | | 40 MM A.A. GUN L/70 Head, Automatic Cocking, Rammer | Ring रिंग | | | | S 145 VF | To be hardened | Verkt.-nr 0004 |
| | | | | | | Ritad | Kontr. | Datum | Skala | 6095844 | | |
| | | | | | | | | 15-9.52 | 1:1 5:1 | | | |

Föreg. ritn. | Tillk. ritn.

AB Bofors äganderätt till denna ritning är skyddad genom lagen av den 30 maj 1919. Konstruktionen eller ritningen får ej utan bolagets medgivande bekantgöras, kopieras eller mångfaldigas, bringas till utförande eller i övrigt obehörigen utnyttjas.

AKTIEBOLAGET BOFORS

| PART Nº | NOMENCLATURE | Nº PER ASSLY. | DESIGNER'S REF. |
|---|---|---|---|
| | SCHEDULE OF PARTS COMPRISING:- | | |
| | RING, SPRING (IAN 55 SA) * | | |
| BOF- | | | BOFORS |
| 6095844 | RING | 15 | 6095844 |
| 6095845 | RING | 14 | 6095845 |
| | WASHER, SPACING N5-15-15X21B | 1 | N5-15 |
| | * REFER BOFORS DRG. Nº 2007475-2 | | |

| PREPARED BY | TRACED BY | CHECKED BY |
|---|---|---|
| | N.K.Y. | |

DESIGNER'S REF.

CIA/WPN/183

SCHEDULE

IAN 55 SA.

| DATE | AUTHORITY | NATURE | SIG. AHSQ | SIG. D.O. |
|---|---|---|---|---|
| | | AMENDMENTS | | |

SCHEDULE SEALED:- 9246-W 4-2-64.

FOR CIA.

PART NO.
IAN 33 A

FOR EXPLANATION OF DIMENSIONING ETC. SEE CIA/PNI NOTE SHT No. 1
DIMENSIONS ARE IN mm

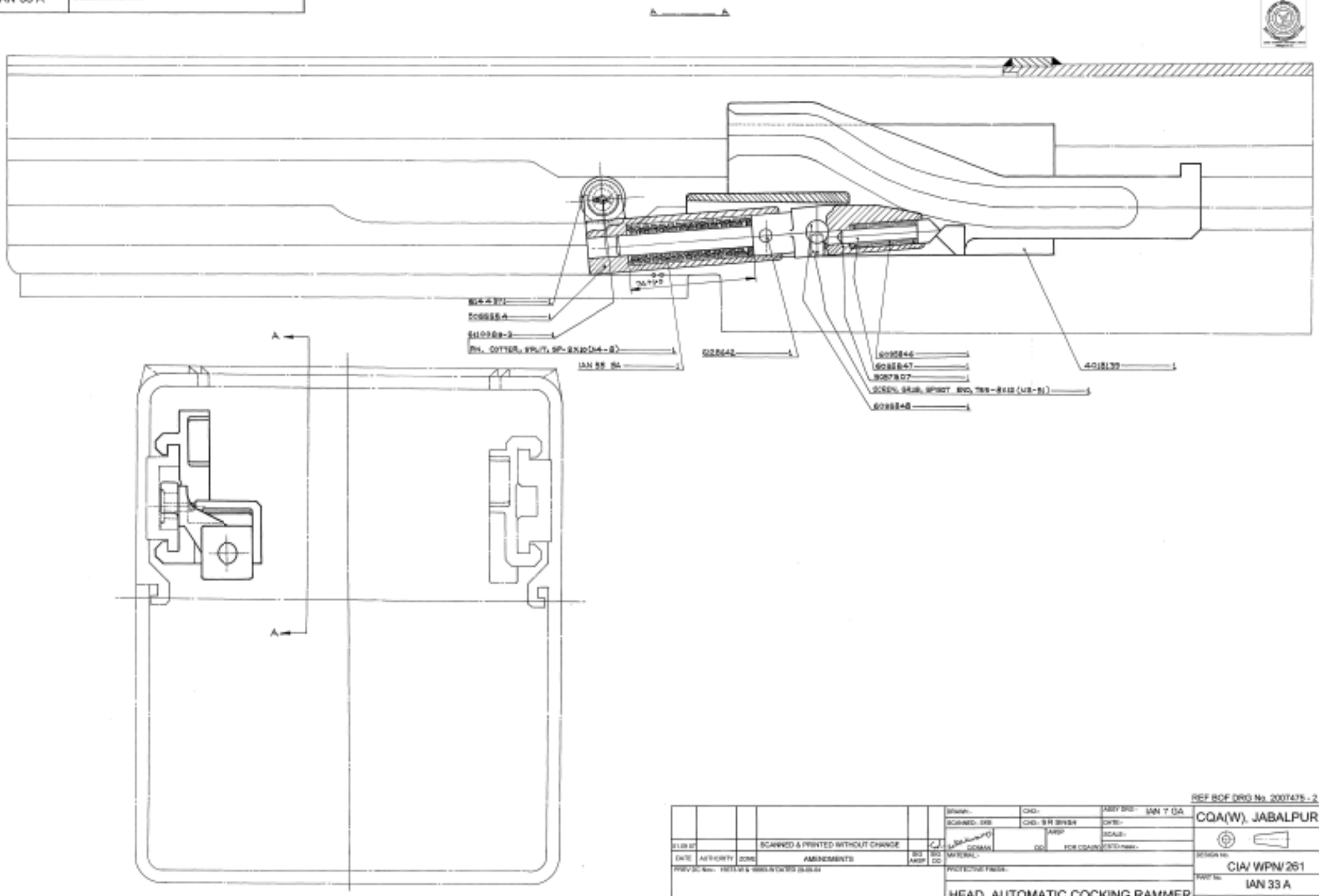


REF BOF DRG No. 2007475 - 2

| | | | | | | | | |
|---|---|---|---|---|---|---|---|---|
| | | | | | DRAWN:- | CHD:- | ASSY DRG:- IAN 7 GA | CQA(W), JABALPUR |
| | | | | | SCANNED:- DKB | CHD:- S R SINGH | DATE:- | |
| 21.08.07 | | | SCANNED & PRINTED WITHOUT CHANGE | | DDMAN | DD | AWSP FOR CQA(W) | SCALE:- |
| DATE | AUTHORITY | ZONE | AMENDMENTS | SIG AWSP | SIG DD | MATERIAL:- | | ESTD:- mass:- |
| PREV DC No:- 15073-W & 15083-W DATED 26.05.04 | | | | | | PROTECTIVE FINISH:- | | DESIGN No. CIA/ WPN/ 261 |
| | | | | | | HEAD, AUTOMATIC COCKING RAMMER | | PART No. IAN 33 A |
| DRG SEALED:- 15073-W DATED 21-08-01 | | | | | | हैड, ऑटोमेटिक कॉकिंग रैमर | | SECRET No. |
| | | | | | DD CQA(W) | | | |

| PART Nº | NOMENCLATURE | Nº PER ASSLY. | DESIGNER'S REF. |
|---|---|---|---|
| | SCHEDULE OF PARTS COMPRISING:- | | |
| | HEAD, AUTOMATIC COCKING RAMER (IAN 33A) * | | |
| BOF- | | | BOFORS |
| 4018139 | CAM-PLATE | 1 | 4018139 |
| 5055554 | HEAD | 1 | 5055554 |
| 6095848 | PIN | 1 | 6095848 |
| 6110089-3 | PIN | 1 | 6110089-3 |
| | PIN, COTTER, SPLIT, SP-2X10 | 1 | N4-8 |
| 6128642 | PIN | 1 | 6128642 |
| 5057607 | PLUNGER | 1 | 5057607 |
| | SCREW, GRUB, SPIGOT END, TSS-8X12 | 1 | N2-51 |
| 6095847 | PLUNGER | 1 | 6095847 |
| IAN 55 5A | RING-SPRING | 1 | CIA/WPN/183 |
| BOF- | | | BOFORS |
| 6144971 | ROLLER | 1 | 6144971 |
| 6095846 | SPRING | 1 | 6095846 |
| | * REFER BOFORS DRG.Nº 2007475-2. | | |

| PREPARED BY | TRACED BY | CHECKED BY |
|---|---|---|
| | S.S.G. | [illegible] |

DESIGNER'S REF.

CIA/WPN/261

SCHEDULE

IAN 33 A

| DATE | AUTHORITY | NATURE AMENDMENTS | SIG AHSP | SIG DO |
|---|---|---|---|---|

SCHEDULE SEALED:- 9246-W 4-2-64

FOR CIA

FOR EXPLANATION OF DIMENSIONING, ETC., SEE CIARM NOTE SHEET No 1
FIRST ANGLE PROJECTION DIMENSIONS ARE IN MILLIMETRES

| Ändr nr | Ändring | Begärd av | Datum | Signatur | Tolerans | Avmatt |
|---|---|---|---|---|---|---|
| | 7504-W 21-12-59 DRG SEALED PROV | | | | 7 HN | 0,0 +0,000 |
| | PREV D C No 9312-W 27-2-64 | | | | 25 HN | 0,0 +0,130 |
| | 17072-W 1.6.91 MATL AMENDED | | | | 64 HN | 0,0 +0,190 |
| | 18883-W 29-9-04 HINDI NOMEN ADDED | | | | 12 h8 | 0,000 -0,027 |

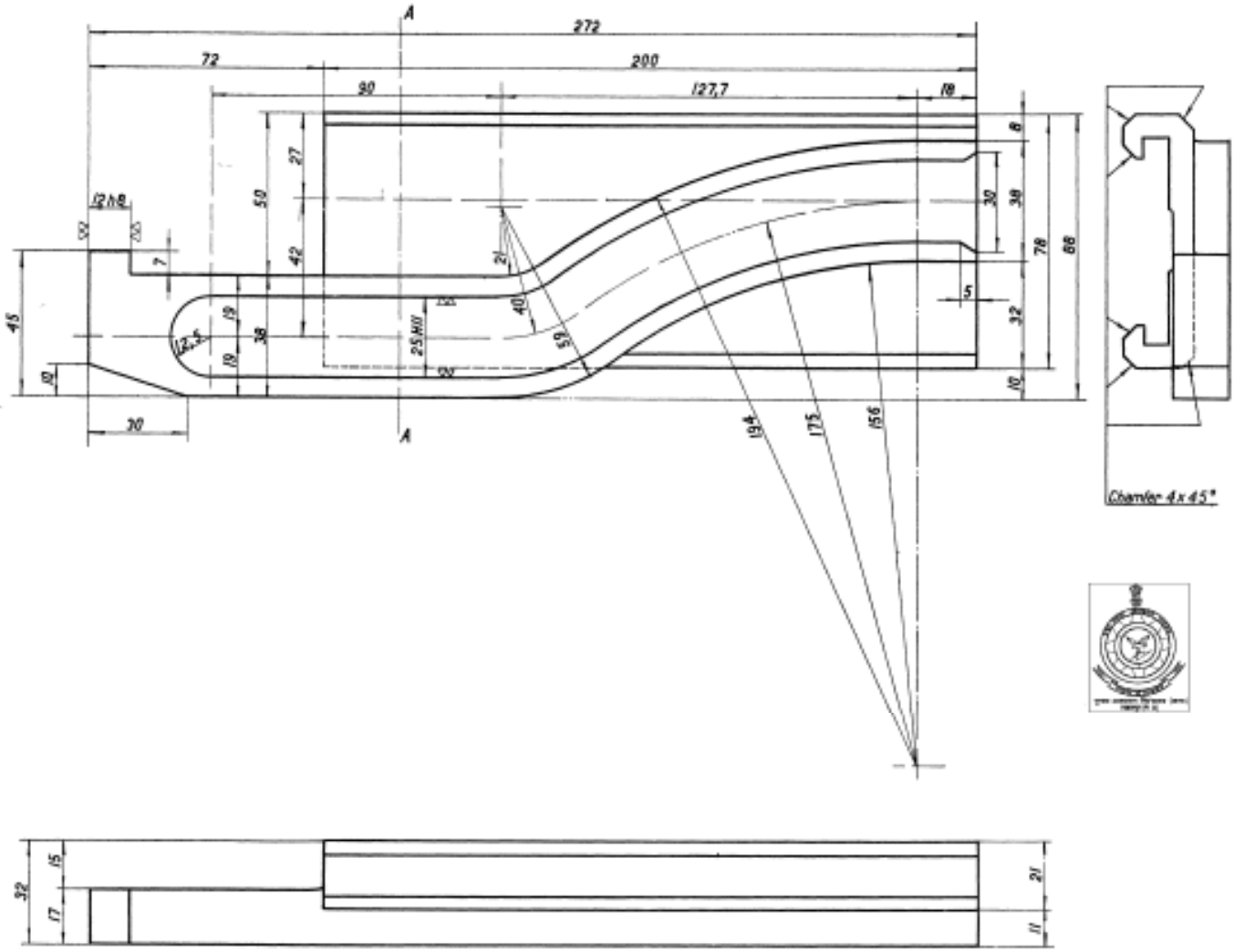


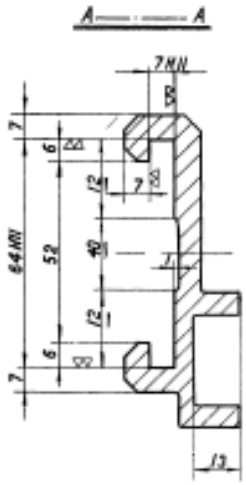


MATL :-
BS 970 PT 1. 1983, GR 835 M 30 (2)

SURFACE TREATMENT TO SPEC Y 058

| | | | | | | | | |
|---|---|---|---|---|---|---|---|---|
| | | 5-935 3/1 | 40 MM A A GUN L/70 Head, Automatic Cocking Rammer | कैम प्लेट राइट Cam-plate, right | KR75-4 | | NR-4241 Verkt-nr 1,63 |
| | | | | Benämning | Nomenkl | Reknr | Der Kfd Ing |
| | | | | Ritad Cog | Kontr | Datum | Skala 1:1 | 4020058 |
| Nr | Nr | Grupp | Nr | Grupp | Ritning dim | | Title nr |

AB BOFORS Ingenjörsvetenskap är skyddad genom lagen av den 30 maj 1919. Konstruktionen eller ritningen för ej utan skriftligt tillstånd kopieras eller mångfaldigas, bringer till förande eller ringrobation gen utnyttjas.

AKTIEBOLAGET BOFORS

22-11-78 | DELAMINATED CLOTH NEGATIVE REPLACED
Ingvarsson | CHECKED | CHIEF D'MAN | DO | ANSP