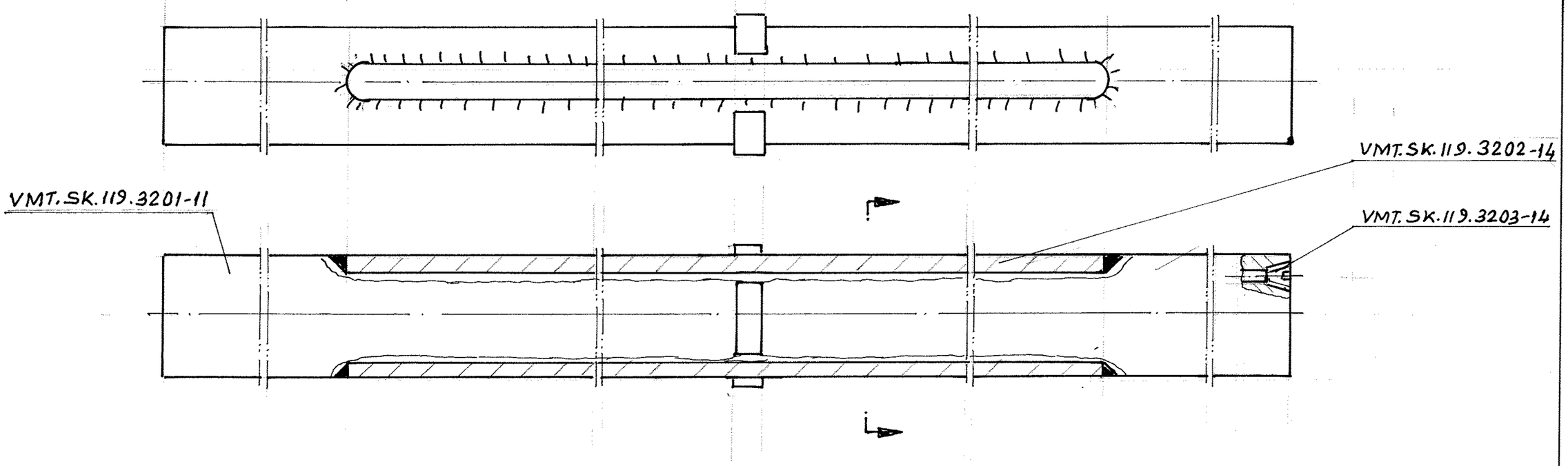

NOTE :- STRESSES TO BE RELIVED AFTER WELDING

E-WELDED

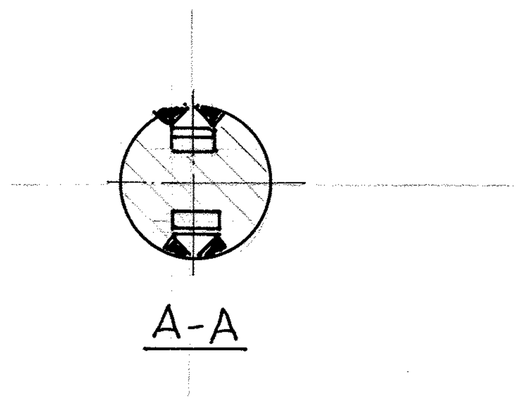

1	SHAFT					
संख्या NO. OFF	विवरण DESCRIPTION	पुर्जा क्र. PART NO.	पदार्थ MATERIAL	मानक STANDARD	परिमाप DIMENSIONS	अभ्यक्ति REMARKS

सामान्य सहिष्णुता GENERAL TOLERANCE

रेखिक परिमाप LINEAR DIMENSION

0 – 6	± 0.1
6 – 30	± 0.2
30 – 120	± 0.3
120 – 315	± 0.5
315 – 1000	± 0.8
1000 – 2000	± 1.2

कोणिक परिमाप ANGULAR DIMENSION

1 – 10	± 1°
10 – 50	± 30'
50 – 100	± 20'
> 100	± 10'

मापांक 'म्यु.एम.' में VALUE IN 'µm'

~	> 25
▽	8 – 25
▽▽	1.6 – 8
▽▽▽	0.025 – 1.6
▽▽▽▽	< 0.025

संख्या NO. OFF	संबंधित पुर्जोका आरेखण क्र. DRG. NO. OF ASSOCIATED PART	सूचक INDEX	संशोधन ALTERATION	दिनांक DATE	नाम NAME

SHAFT
PNEUMATIC COUPLING ASSY.
125 mm SCCC WINDING M/C.

मापमान SCALE 1:2

आरेखित DRAWN 15.3.99

जाँचा CHECKED

अनुमोदित APPROVED

द्वारा बदला REPLACED BY

हेतु बदला REPLACED FOR

मशीनी औजार आदिरूप फैक्टरी, अम्बरनाथ
MACHINE TOOL PROTOTYPE FACTORY, AMBARNATH

कार्यालय OFFICE VMT

आरेखण क्र. DRAWING NO. VMT.SK.119.3200-43

मूलमाप व अन्वायोजन NOMINAL SIZE & FIT

विचलन DEVIATION

इन आरेखणों तथा इसके साथ की सम्पूर्ण सामग्री का स्वत्वाधिकार भारत सरकार, रक्षा मंत्रालय की भारतीय आयुध निर्माणियों के पास है। भारतीय आयुध निर्माणियों के महानिदेशक की लिखित अनुमति के बिना इनकी नकल या किसी भी रूप में इनके उद्धरण या इनमें समाहित सूचना किसी अनधिकृत व्यक्ति को उपलब्ध नहीं कराई जानी चाहिए।

THE COPYRIGHT OF THESE DRAWINGS AND ALL ATTACHMENTS THERETO BELONGS TO THE INDIAN ORDNANCE FACTORIES, MINISTRY OF DEFENCE, GOVT. OF INDIA. THEY SHOULD NOT BE COPIED, REPRODUCED IN ANY WAY OR THE INFORMATION CONTAINED THEREIN MADE AVAILABLE TO UNAUTHORISED PERSONS WITHOUT THE WRITTEN PERMISSION OF THE DIRECTOR GENERAL OF ORDNANCE FACTORIES.

2344-0362-03MK

Rz 50

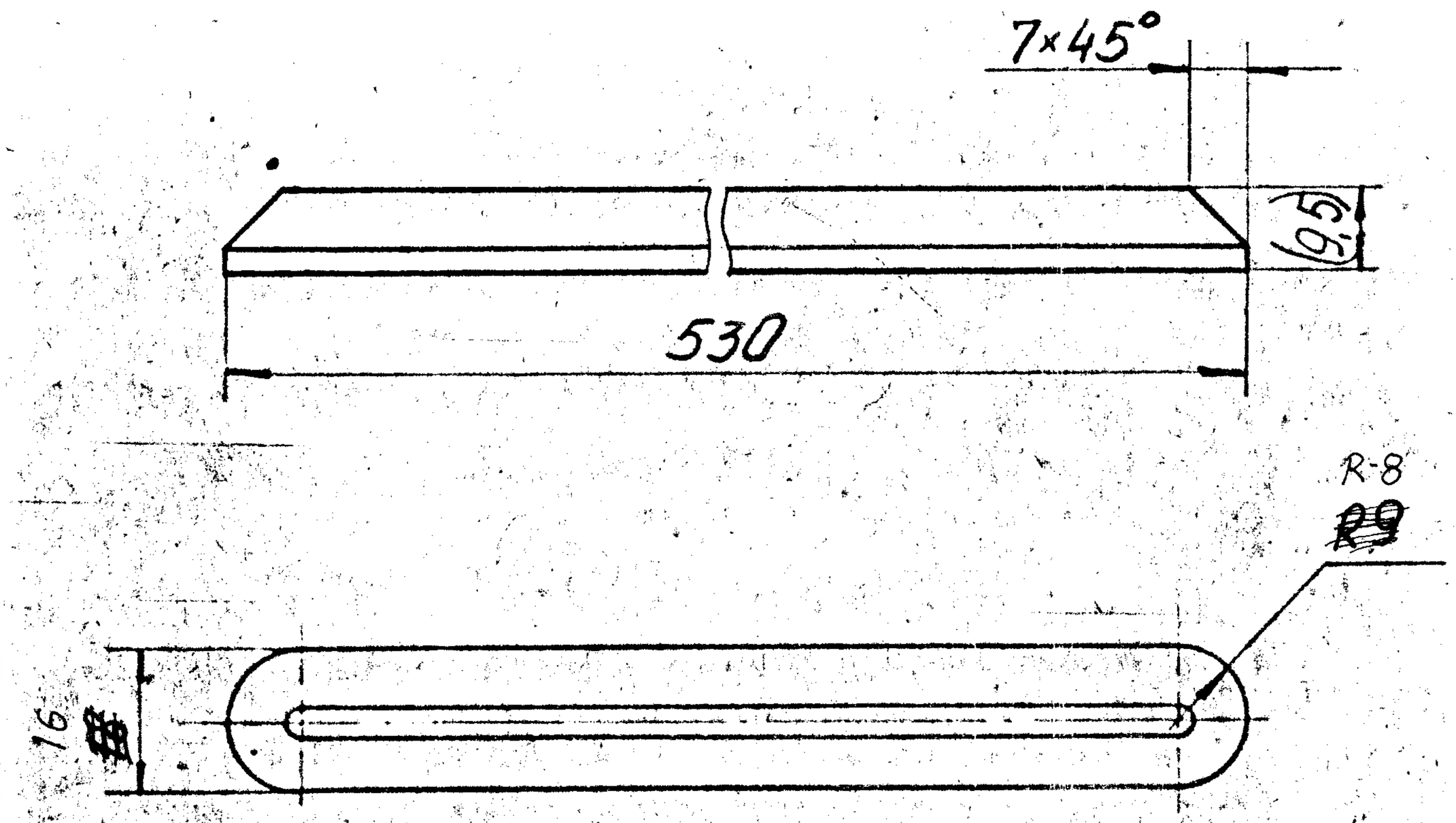

1. Пред. откл. размеров: валов H14, остальных $\frac{JT14}{2}$.
2. Размеры в скобках – после сварки.

1. Limit size deviations for : shafts – H14, others $\frac{JT14}{2}$.
2. Dimensions in brackets are after welding.

MATL.:- IS:5517-40C8 / C-40

		DIMS. CHANGE AS PER WND inst.	13/01/2000	
Изм	Лист	N докум.		Дата

INSERT
PNEUMATIC COUPLING ASSY.
125mm.SCCC. WINDING M/C.

DRG. NO. VMT.SK.119.3202-14

APPROVED BY
AUTHENTICATED BY.

SUPPORTED BY.
A.K. MATH

NO. OFF - 2

MATL. C-40

2344-0362-03MK

Вкладыш
INSERT

Лит.	Масса	Масштаб
Н	0,46	1:1
Лист	Листов	1

Сталь 20ГОСТ1050-74

39

Формат А4

VMT.SK.119.3202-1

2344-0362-02MK

R2 32

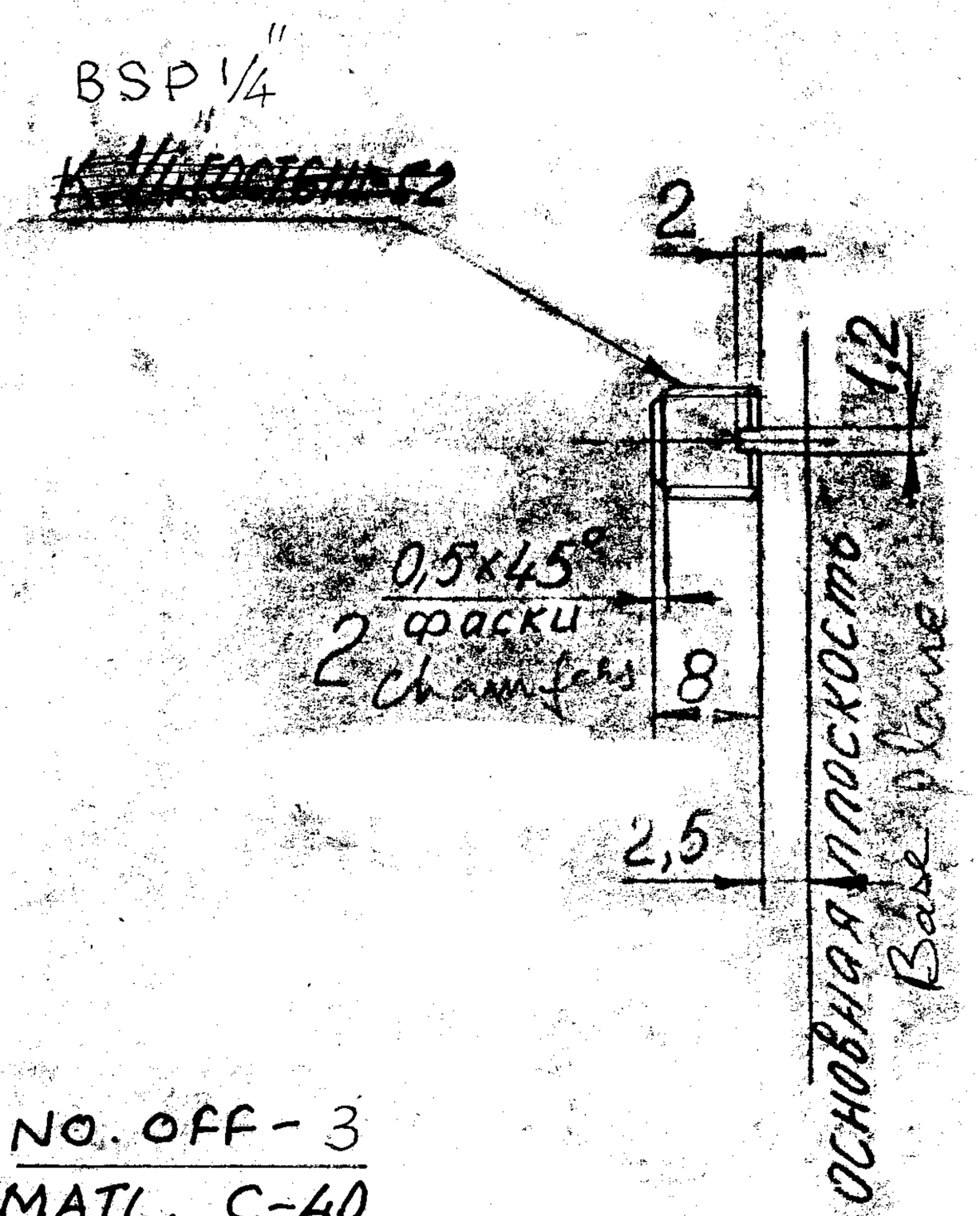

NO. OFF - 3
MATL. C-40

NO. OFF - 3 , MATL. : IS: 5517. 40C8

PLUG PNEUMATIC COUPLING ASSY. 125 mm S.C.C. WINDING M/C. D.RG. NO. VMT.SK. 119-3203-14.	AUTHENTICATED BY. APPROVED BY SUPPORTED BY. NATH A.K.

1 Неуказанные предотакл. размеров: отв. H14, валов h14, остальных $\pm \frac{IT14}{2}$

2. Покрытие Гор О ГОСТ 9.073-77.

1. Unspecified limit size deviations for: Holes - H14, shafts h14, others $\pm \frac{IT14}{2}$.

2. Coating: Hot tinning GOST 9.073-77.

Изм	Лист	№ докум		Подп

2344-0362-02MK

Заглушка
Plug

сталь 45
steel

Лит.	Масса	Масштаб
И		1:1
Лист	Листов	1

VMT-SK-119-3200-12 (MOD), Sheet 1/2

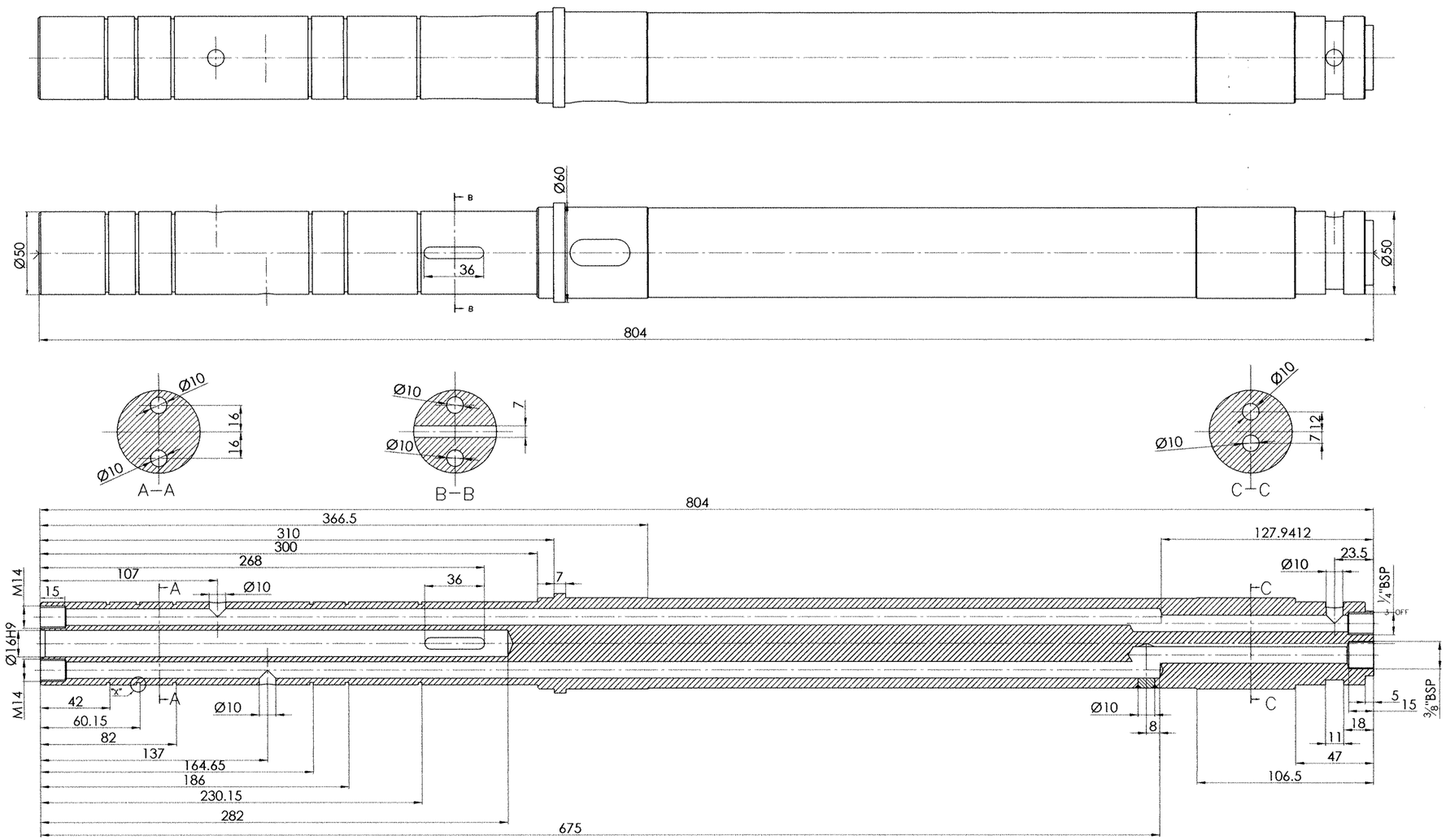

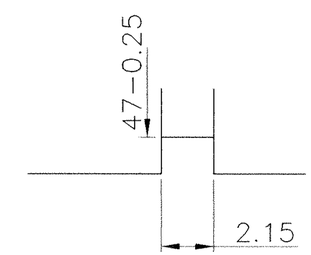

DETAILS "X"

Note:-

1) AFTER WELDING HEAT TREAT FOR STRESS RELIEF, PROTECT THREADED SURFACES.
2) UNSPECIFIED LIMIT SIZE DIMESNSIONS FOR HOLE H14, SHAFT h-14,OTHERS JT14/2.
3) DIMENSIONS AND SURFACE ROUGHNESS ARE AFTER COATING.
4) COATING OF EXTRENAL SURFACES : Cr24 HARD CHROME AS PER GOST:- 9073-77.
5) MANUAL ARC WELDING AFTER MACHINING A WELD WITH LEG OF 2MM,TEST THE SHAFT FOR AIR TIGHTNESS BY APPLYING HYDRAULIC PRESSURE OF 0.3 MPA (3 KG/CM2).
6) SOLDER THE PLUGS AFTER CHECKING FOR AIR TIGHTNESS WITH SOLDER П OC40 GOST-21931-76.

GRINDING SIZE BEFORE Cr. PLATING SIZE IS AS FOLLOWS.

1) FOR Ø 50 f 9 -0.025,- 0.087 = Ø 49.896±0.015
   Cr. PLATING SIZE :- Ø 50.144 ±0.001
2) GRINDING SIZE BEFORE Cr. PLATING SIZE
   FOR Ø 55h9 -0.074 = Ø 54.915 ±0.015
   Cr. PLATING SIZE :- Ø 55.163 ±0.001
3) GRINDING SIZE BEFORE Cr. PLATING SIZE
   FOR Ø 55f 9 -0.030,-0.090 = Ø 54.892 ±0.015
   Cr. PLATING SIZE :- Ø 55.14 ±0.001
4) GRINDING SIZE BEFORE Cr. PLATING SIZE
   FOR Ø 50 p 6 +0.042,-0.026 = Ø 49.986 ±0.015
   Cr. PLATING SIZE :- Ø 50.234 ±0.001

*** TO BE PRE MACHINED AS PER DRAWING VMT-SK-119 - 3200 (MOD) SHEET 2/2

इन आरेखणो तथा इसके साथ की सम्पूर्ण सामग्री का स्वत्वाधिकार भारत सरकार रक्षा मंत्रालय की भारतीय आयुध निर्माणियों के पास है। भारतीय आयुध निर्माणियों के महानिदेशक की लिखित अनुमति के बिना इनकी नकल या किसी भी रूप में इनके उद्धरण या इनमें समाहित सूचना किसी अनधिकृत व्यक्ति को उपलब्ध नही कराई जानी चाहिए ।
THE COPYRIGHT OF THESE DRAWINGS AND ALL ATTACHMENTS THERETO BELONGS TO THE INDIAN ORDNANCE FACTORIES, MINISTRY OF DEFENCE, GOVT. OF INDIA. THEY SHOULD NOT BE COPIED,REPRODUCED IN ANY WAY OR THE INFORMATION CONTAINED THEREIN MADE AVAILABLE TO UNAUTHORISED PERSONS WITHOUT THE WRITTEN PERMISSION OF THE DIRECTOR GENERAL OF ORDNANCE FACTORIES.

मूलमाप व अन्वायोजन NOMINAL SIZE & FIT	विचलन DEVIATION

संख्या NO.OFF	विवरण DESCRIPTION	पुर्जा क्र. PART NO.	पदार्थ MATERIAL	मानक STANDARD	परिमाप DIMENSIONS	अभ्यक्ति REMARKS
03		x	C-40			

सामान्य सहिष्णुता GENERAL TOLERANCE	
रेखिक परिमाप LINEAR DIMENSION	
0-6	±0.1
6-30	±0.2
30-120	±0.3
120-315	±0.5
315-1000	±0.8
1000-2000	±1.2
कोणिक परिमाप ANGULAR DIMENSION	
1-10	±1°
10-50	±30'
50-100	±20'
>100	±10'
मापांक 'म्यू एम' में VALUE IN "um"	
~	>25
▽	6-25
▽▽	1.6-8
▽▽▽	0.025-1.6
▽▽▽▽	<0.025

संख्या NO.OFF	संबंधित पुर्जोका आरेखण क्र. DRG. NO. OF ASSOCIATED PART	सूचक INDEX	संशोधन ALTERATION	2015	दिनांक DATE	नाम NAME

SHAFT
FOR PNEUMATIC COUPLING ASSEMBLY
125 mm SCCC WINDING MACHINE

मापमान SCALE 1:1	आरेखित DRAWN	25.10	UMESH
	जाँचा CHECKED	2/11/15	PRADEEP
	अनुमोदित APPROVED	16/11/15	DEBASHREE
द्वारा बदला REPLACED BY			
हेतु बदला REPLACED FOR			

मशीनी औजार आदिरूप फैक्टरी, अम्बरनाथ
MACHINE TOOL PROTOTYPE FACTORY, AMBERNATH

कार्यालय OFFICE VMT

आरेखण क्र. DRAWING NO. Sheet 1/2
VMT-SK-119-3200-12(MOD)

VMT-SK-119-3200-12 (MOD), Sheet 2/2

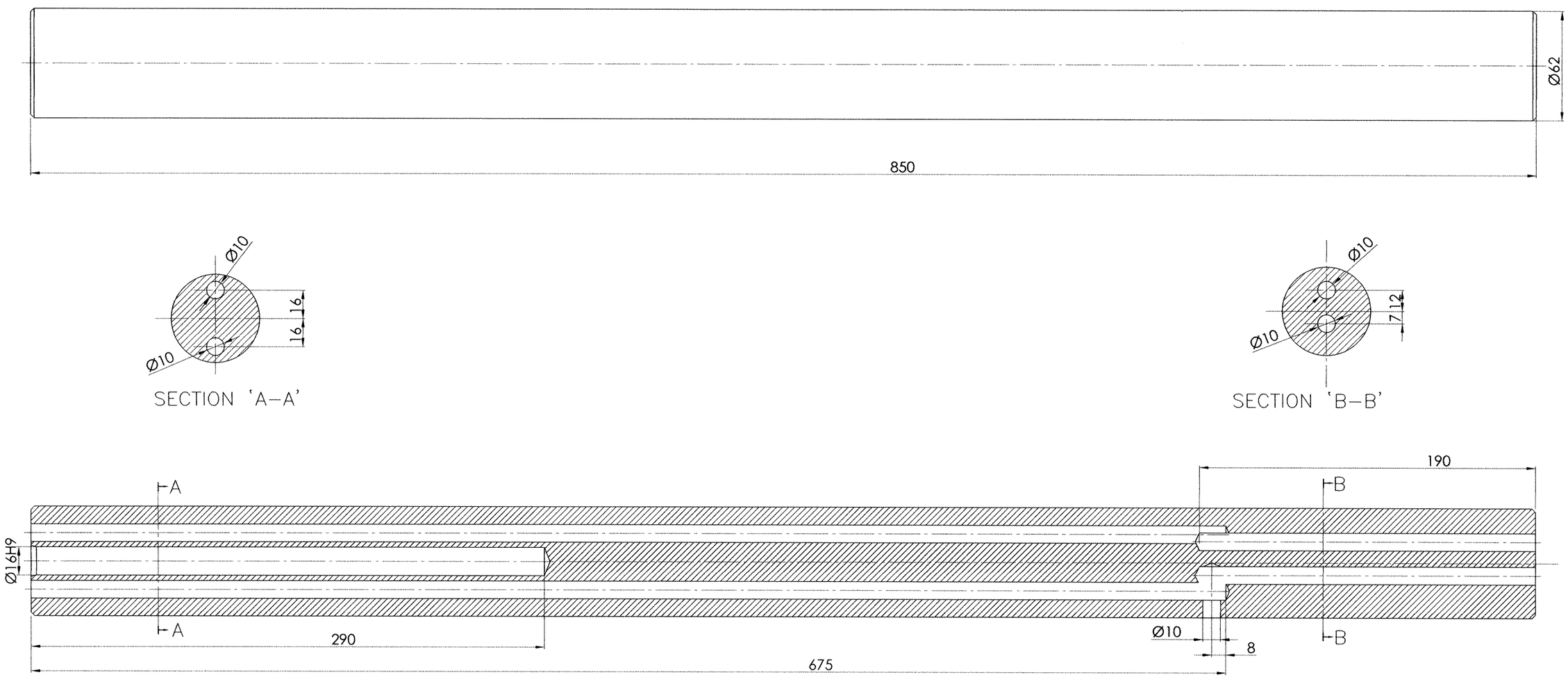

03			x	C-40			
संख्या NO.OFF	विवरण DESCRIPTION		पुर्जा क्र. PART NO.	पदार्थ MATERIAL	मानक STANDARD	परिमाप DIMENSIONS	अभ्यक्ति REMARKS

सामान्य सहिष्णुता GENERAL TOLERANCE

रेखिक परिमाप LINEAR DIMENSION

0-6	±0.1
6-30	±0.2
30-120	±0.3
120-315	±0.5
315-1000	±0.8
1000-2000	±1.2

कोणिक परिमाप ANGULAR DIMENSION

1-10	±1°
10-50	±30'
50-100	±20'
>100	±10'

मापीक 'म्यू एम' में VALUE IN "um"

~	>25
▽	8-25
▽▽	1.6-8
▽▽▽	0.025-1.6
▽▽▽▽	<0.025

संख्या NO.OFF	संबंधित पुर्जोका आरेखण क्र. DRG. NO. OF ASSOCIATED PART	सूचक INDEX	संशोधन ALTERATION	2015 दिनांक DATE	नाम NAME

SHAFT
FOR PNEUMATIC COUPLING ASSEMBLY
125 mm SCCC WINDING MACHINE

मापमान SCALE 1:1	आरेखित DRAWN	UMESH
	जाँचा CHECKED	PRADEEP
	अनुमोदित APPROVED	DEBASHREE
द्वारा बदला REPLACED BY		
हेतु बदला REPLACED FOR		

मशीनी औजार आदिरूप फैक्टरी, अम्बरनाथ
MACHINE TOOL PROTOTYPE FACTORY, AMBERNATH

कार्यालय OFFICE VMT

आरेखण क्र. DRAWING NO. Sheet 2/2
VMT-SK-119-3200-12 (MOD)

मूलमाप व अन्वायोजन NOMINAL SIZE & FIT | विचलन DEVIATION

इन आरेखणो तथा इसके साथ की सम्पूर्ण सामग्री का स्वत्वाधिकार भारत सरकार रक्षा मंत्रालय की भारतीय आयुध निर्माणियों के पास है। भारतीय आयुध निर्माणियों के महानिदेशक की लिखित अनुमति के विना इनकी नकल या किसी भी रूप में इनके उद्धरण या इनमें समाहित सूचना किसी अनधिकृत व्यक्ति को उपलब्ध नही कराई जानी चाहिए ।

THE COPYRIGHT OF THESE DRAWINGS AND ALL ATTACHMENTS THERETO BELONGS TO THE INDIAN ORDNANCE FACTORIES, MINISTRY OF DEFENCE, GOVT. OF INDIA. THEY SHOULD NOT BE COPIED,REPRODUCED IN ANY WAY OR THE INFORMATION CONTAINED THEREIN MADE AVAILABLE TO UNAUTHORISED PERSONS WITHOUT THE WRITTEN PERMISSION OF THE DIRECTOR GENERAL OF ORDNANCE FACTORIES.

2344-036-00MKCB

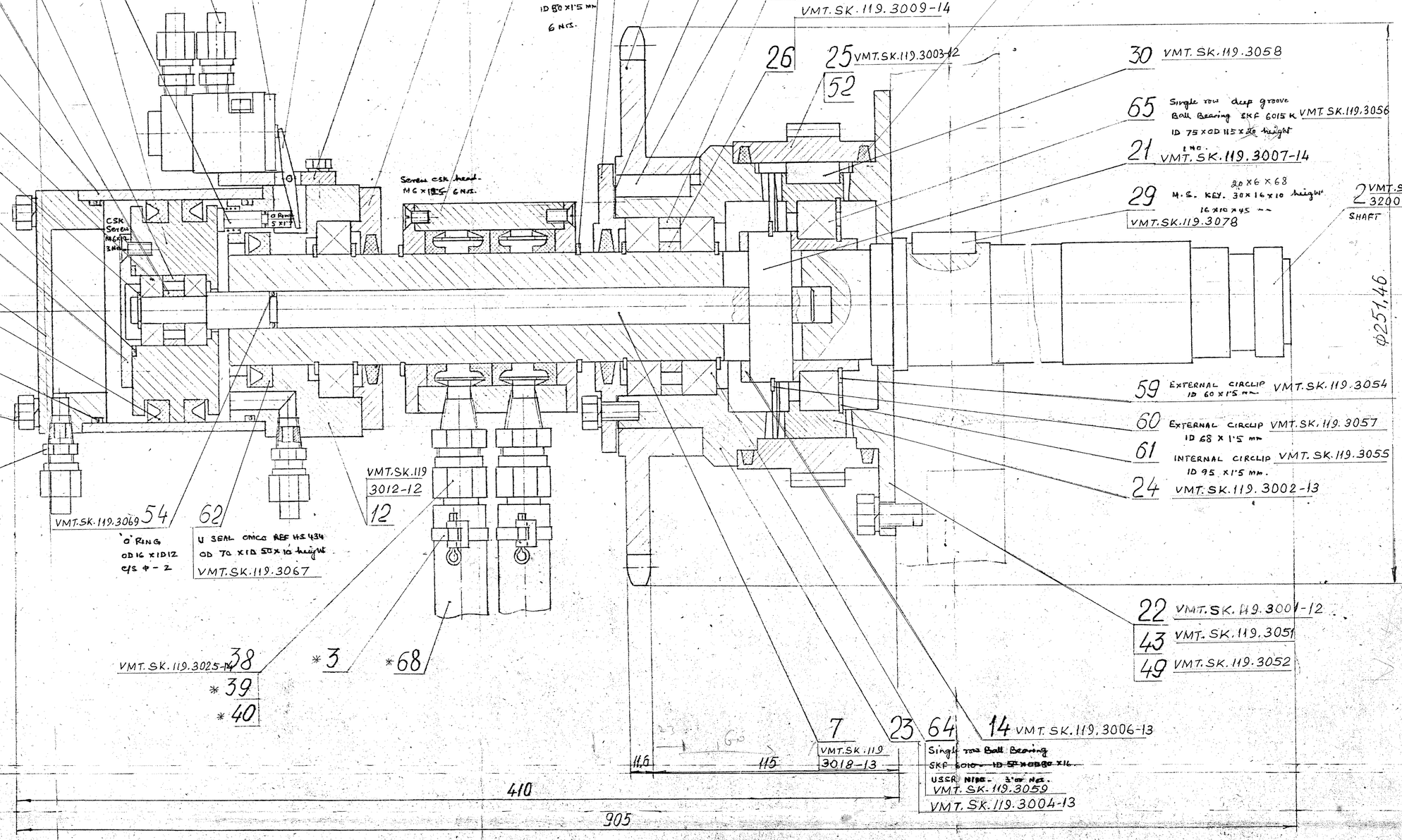

Размеры для справок.

Dimensions for reference

C-11

* MENTIONED PNEUMATIC CIRCUIT DRG

Book No. 347

PNEUMATIC COUPLING ASSY. 125 mm SCCC WINDING M/C FOR O.F. CHANDA	AUTHENTICATED BY APPROVED BY	2344-036-00MKCB	Муфта пневматическая сборочный чертеж
	SUPPORTED BY (A.K. NATH)	PNEUMATIC COUPLING ASSY. DRAWING	DRG. NO VMT.SK.119.3000-11

Лит. | Масса | Масштаб: 25 | 1:1

Лист | Листов: 67/334

Формат А1

Взам. инв. № | Подп. и дата | Инв. № подл. | Подп. и дата

2344-0362-00МКСБ

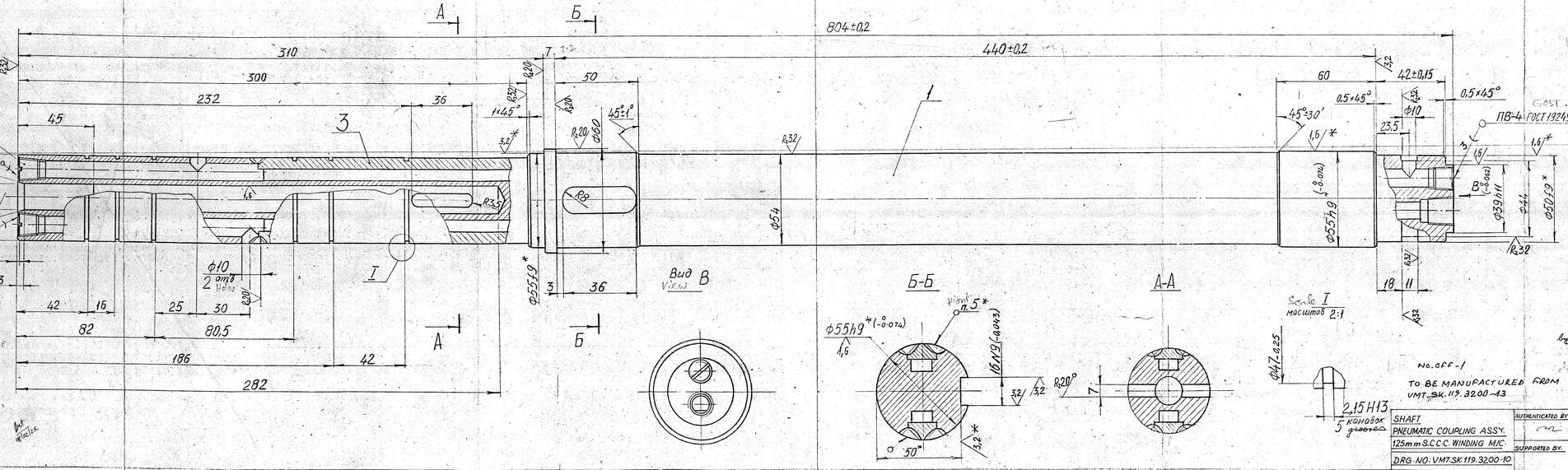

GRINDING SIZE BEFORE Cr PLATING SIZE

FOR 1) Ф50 f9 $^{-0.025}_{-0.087}$ = Ф49.896 ±0.015

Cr. PLATING SIZE:- Ф50.144 ±0.001

2) GRINDING SIZE BEFORE Cr. PLATING SIZE

FOR Ф55 h9 $^{0}_{-0.074}$ = Ф54.915 ±0.015

Cr. PLATING SIZE = Ф55.165 ±0.001

3) GRINDING SIZE BEFORE Cr. PLATING SIZE

FOR Ф55 f9 $^{-0.030}_{-0.090}$ = Ф54.892 ±0.015

Cr. PLATING SIZE = Ф55.14 ±0.001

4) GRINDING SIZE BEFORE Cr. PLATING SIZE

FOR Ф50 p6 $^{+0.042}_{+0.026}$ = Ф49.986 ±0.015

Cr. PLATING SIZE = Ф50.23* ±0.002

1. After welding heat treat for stress relief. Protect threaded surfaces.
2. Unspecified limit dimensions for: Holes-H14, shafts-h14, others ±IT14.

1. После сварки термически обработать для снятия напряжений. Резьбовые поверхности предохранить.
2. Неуказанные пред. откл размеров: отв. H14, валов h14, остальных ±IT14.
3* размеры и шероховатость поверхностей после покрытия.
4. Покрытие наружных поверхностей Хтв. 24 ГОСТ 9.073-77.
5. Сварка ручная дуговая. После наложения шва котелок 2мм вал проверить на герметичность давлением воды 0,3МПа (3 кг/см²).
6. Пробки после проверки на герметичность запаять. Припой ПОС40 ГОСТ 21931-76.

3*. Dimensions and surface roughness are after coating.
4. Coating of external surfaces: Cr 24, hard chromium as per GOST 9.073-77.
5. Manual arc welding. After making a weld with a kettle test the shaft for airtightness by supplying hydraulic pressure of 0.3 MPa (3 Kgs/cm²). Weldings after checking for airtightness with POC 40 GOST 21931-76.

Book № 947

NO. 6FF-1

TO BE MANUFACTURED FROM VMT.SK.119.3200-43

SHAFT	AUTHENTICATED BY
PNEUMATIC COUPLING ASSY.	
125mm S.C.C.C. WINDING M/C	SUPPORTED BY
DRG. NO. VMT.SK.119.3200-10	

Изм	Лист	№ докум	Подп	Дата	2344-0362-00МКСБ	Лит	Лист	Листов
					Вал сборочный чертеж / SHAFT Assy. Drawing		11.4	1:1
						Лист	Листов	1

Copied 334

2344-0362-01MK

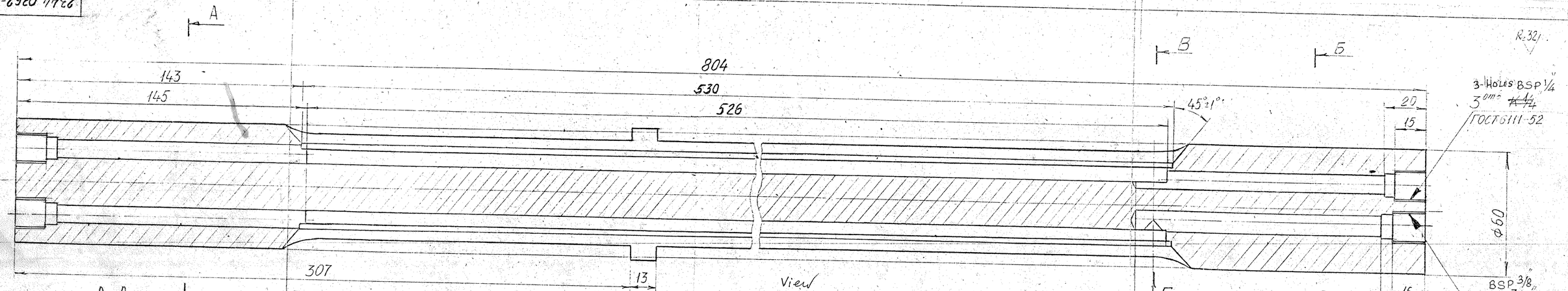

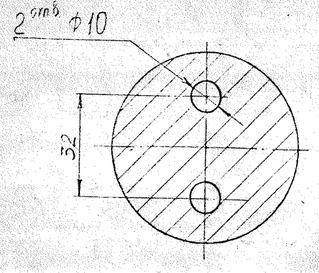

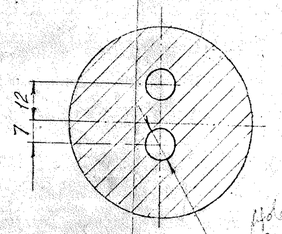

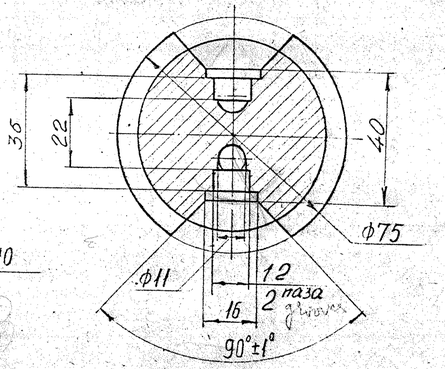

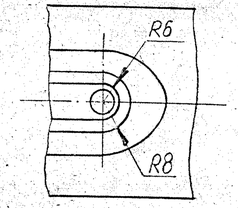

1. Неуказанные пред. откл. размеров: отв. H14, валов h14, остальных $\frac{JT14}{2}$

1. Unspecified limit dimensions for: Holes – H14, Shafts h14, others $\frac{JT14}{2}$

NO. OFF - 1

MATL.:- C-40

SHAFT	AUTHENTICATED BY:
PNEUMATIC COUPLING ASSY.	APPROVED BY
125mm. S.C.C.C. WINDING. M/C.	SUPPORTED BY:
DRG. NO. VMT. SK. 119. 3201-10	

Book no 347

Изм.	Лист	№ докум.	Подп.	Дата	2344-0362-01MK			
					Вал / Shaft / Shaft	Лит.	Масса	Масштаб
						И	15	1:1
					сталь 20 ГОСТ 1050-74	Лист	Листов	1
						35/934		

Формат А4×4

M.P.F. AMBARNATH	PART LIST : 125mm SEMI CMB. CRTDG. CASE GROUP : WINDING M/C. SUB GROUP : PNEUMATIC COUPLING ASSY.	ORDER NO.	SHT. NO. 20
		ASSY. DRG. NO. VMT. SK. 119. 3000 – 11	

PART NO.	NO. OFF	DESCRIPTION	MATERIAL	REMARKS
VMT.SK.119.				
3001 – 12	1	DISK	C-65	TOUGHENED
3002 – 13	1	RING	C-65	TOUGHENED
3003 – 12	1	PINION	PHOS.BRONZE IS:7811	
3004 – 13	1	BODY	C-65	TOUGHENED
3005 – 12	1	SPROCKET	C – 65	TOUGHENED
3006 – 13	1	BUSH	PHOS.BRONZE IS:7811	TOUGHENED
3007 – 14	1	DOWEL	C-65	
3008 – 14	1	RING	C-40	
3009 – 14	1	RING	C-40	
3010 – 14	1	COVER	C-40	
3011 – 13	1	FLANGE	C-40	
3012 – 12	1	BODY	C-40	
3013 – 14	1	ROCKER	BRASS	
3014 – 14	1	AXLE	C-40	
3015 – 14	1	PLATE	C-40	
3016 – 14	1	PLUNGER	C-40	
3017 – 13	1	COMP. SPRING	IS:4454 Pt-1	
3018 – 13	1	ROD	C-40	
3019 – 13	1	PISTON	C-40	
3020 – 14	1	COVER	C-40	
3021 – 13	1	COVER	C-40	
3022 – 14	4	TIE ROD	C-40	
3023 – 14	1	SLEEVE	C-40	
~~3024 – 14~~	~~8~~	~~UNION NIPPLE~~	~~C-40~~	NOT REQUIRED
3025 – 14	8	UNION NIPPLE	C-40	
3026 – 14	1	GASKET	RUBBER	
3027 – 14	1	RING	C – 40	
3028 – 14	1	RING	C – 40	

MACHINE TOOL PROTOTYPE FACTORY , AMBARNATH

CHD. BY NATH A K SIG.	FORMAT NO. 444002
DATE 15-3-99	

M.P.F. AMBARNATH	PART LIST : 125mm SEMI CMB. CRTDG. CASE GROUP : WINDING M/C. SUB GROUP : PNEUMATIC COUPLING ASSY.	ORDER NO.	SHT. NO. 21
		ASSY. DRG. NO. VMT. SK. 119. 3000 – 1/	

PART NO.	NO. OFF	DESCRIPTION	MATERIAL	REMARKS
VMT. SK. 119.				
3051	6	HEX. SOC. CAP SCREW M10 X 25	1S:2269	
3052	6	SPRING WASHER 10.ø	1S:3063	
3053	1	FELT WASHER 10 X 10 X 2000 Lg		
3054	1	EXTERNAL CIRCLIP TYPE 'A' 60ø X 2	1S:3075	
3055	1	INTERNAL CIRCLIP TYPE 'B' 95ø X 3	1S:3075	
3056	1	SIN.R.DP.BL.BEARING 60 X 95 X 18	SKF 6012	
3057	1	EXTERNAL CIRCLIP TYPE 'A' 68ø X 2.5	1S:3075	
3058	1	PARALLEL KEY 16 X 10 X 25 Lg.	1S:2048	
3059	3	SIN.R.DP.BL.BEARING 50 X 80 X 16	SKF 6010	
3060	6	EXTERNAL CIRCLIP TYPE 'A' 50ø X 2	IS:3075	
3061	3	HEX.SOC.HD.CAP SCREW M8 X 20	IS:2269	
3062	3	SPRING WASHER 9ø	1S:3063	
3063	12	RUBBER SEAL ID50 X 70 OD X 9	SPARE AGE MR(4B)	
3064	8	C'SK. HD. SCREW M6 X 10	1S:5308	
3065	2	HEX.SOC.HD.CAP SCREW M6 X 15	1S:2269	
3066	2	PLAIN WASHER 6.5ø	IS:2016	
3067	1	U – SEAL 50ø X 70ø X 10	OMCO MAKE TYPE – 434 (FOR PNEUMATIC APPLICATION) operating Pressure = 6 bar	
3068	1	O – RING ID 5ø X OD 8ø	VAKO MAKE	
3069	1	O – RING ID 12 X OD 16	VAKO MAKE	
3070	2	'O' RING ID 94 X OD 100	VAKO MAKE	
3071	2	U – SEAL OD 100 X ID 80 X 10	OMCO MAKE TYPE – 434 (FOR PNEUMATIC APPLICATION) operating Pressure = 6 bar	
3072	2	SIN.R.DP.BL.BEARING 12 X 32 X 10	SKF 6201	
3073	4	C'SK. HD. SCREW M6 X 10	1S:5308	

CHD. BY NATH A K SIG.
DATE 15.3.99

* Specification changed on 24.1.2000

FORMAT NO. 444002

MACHINE TOOL PROTOTYPE FACTORY , AMBARNATH