DRG.No.
TRD-22-2273

VETTED - FOR PLANNING AND TRADE ENQUIRY ONLY.

THIS DOCUMENTS IS THE PROPERTY OF GOVT. OF INDIA, MINISTRY OF DEFENCE & IS ISSUED FOR THE PURPOSE OF DEVELOPING/MANUFACTURING STORES REQUIRED FOR DEFENCE USE. IT MUST NOT BE REPRODUCED/DISCLOSED TO ANY THIRD PARTY OR USED FOR AND CIVIL PURPOSE.

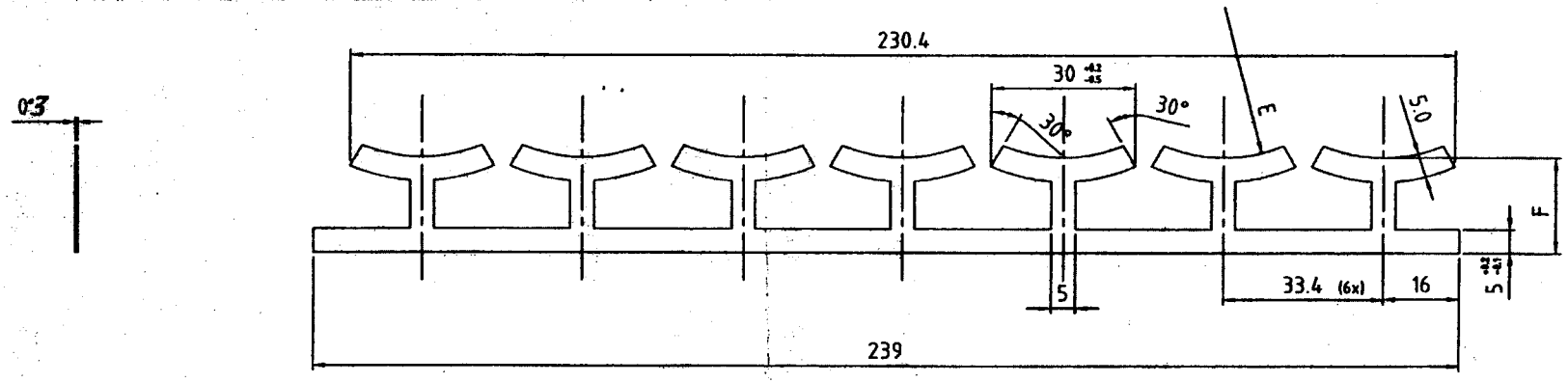

EXTENDED

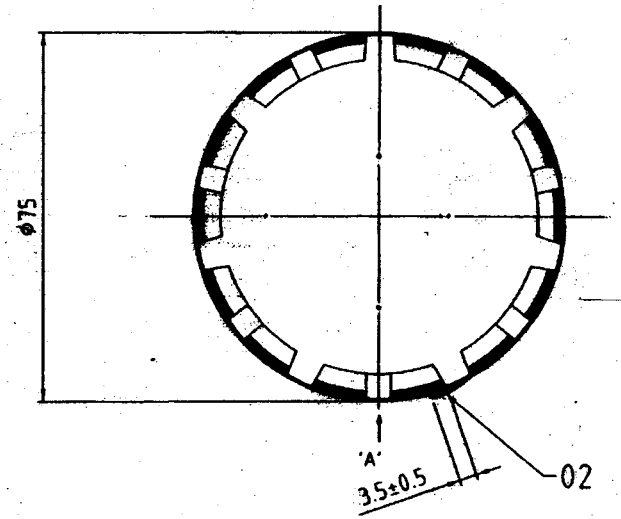

PERFORMANCE		
	ALT. 1	ALT. 2
MEASURE E	R32	R38
MEASURE F	20	20.8

WEIGHT :- 6g

MATERIAL :- SIS STEEL 2331-42 OR
SSEN 10088-2 1.4310 CP. 900/C1300.

SECTION 'B-B'

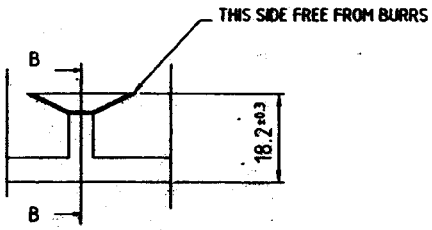

VIEW 'A'

Insp.	Date	JWM/ CDO	DA No
Amendments			
JWM/ R&D			
JWM/ CDO		DATE 16.10.07	
CKD		CKD	
DRN		TRD	
Approved by JT.GM/R&D & CTR			

Item No.	DESCRIPTION	No. off	MATERIAL
	Heat Treatment Rc.-		SPACER
	▽ 12.5-25 Ra ▽▽▽ 0.2-0.8 Ra		M/C
	▽▽ 1.6-6.3 Ra ▽▽▽▽ 0.1-0.025 Ra		Drg. No. TRD-22-2273
	DIMENSIONS ARE IN mm.		
	UNTOL. DIMNS. IS:2102 MEDIUM		
	SHARP EDGES TO BE REMOVED		SCALE:-
	Gauging surfaces shown by thick line		
	ORDNANCE FACTORY KHAMARIA		No. of sheets - 01 Sheet No. - 01

PS/GS.

Store :- 84mm HEAT 551
Drg.No.

Compt.:-
DRG.NO.- 5209773