Do not scale the drg.
If in doubt, Ask

Unless otherwise stated, ① All dim in mm
② Drg. drawn to first angle projection

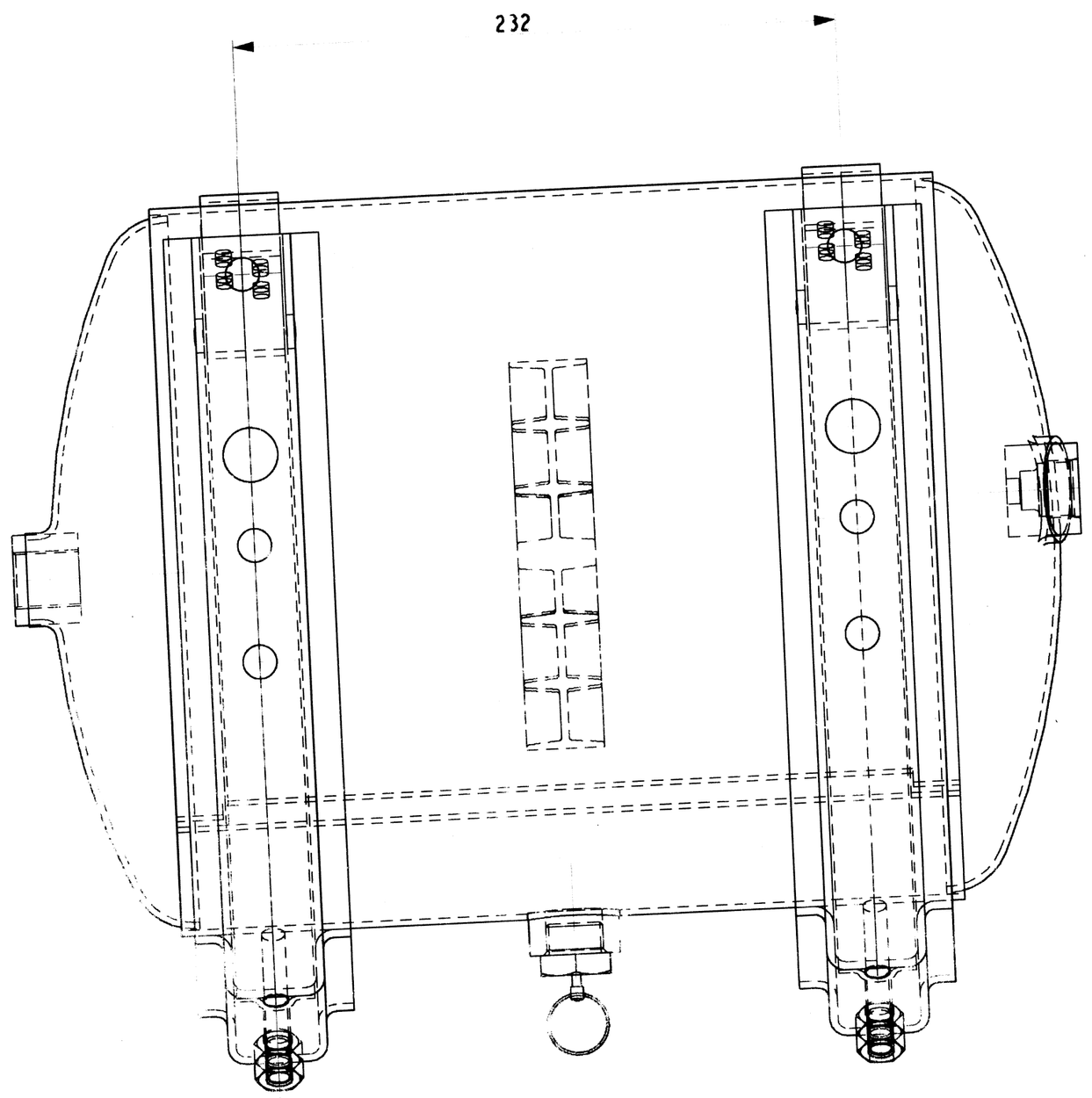

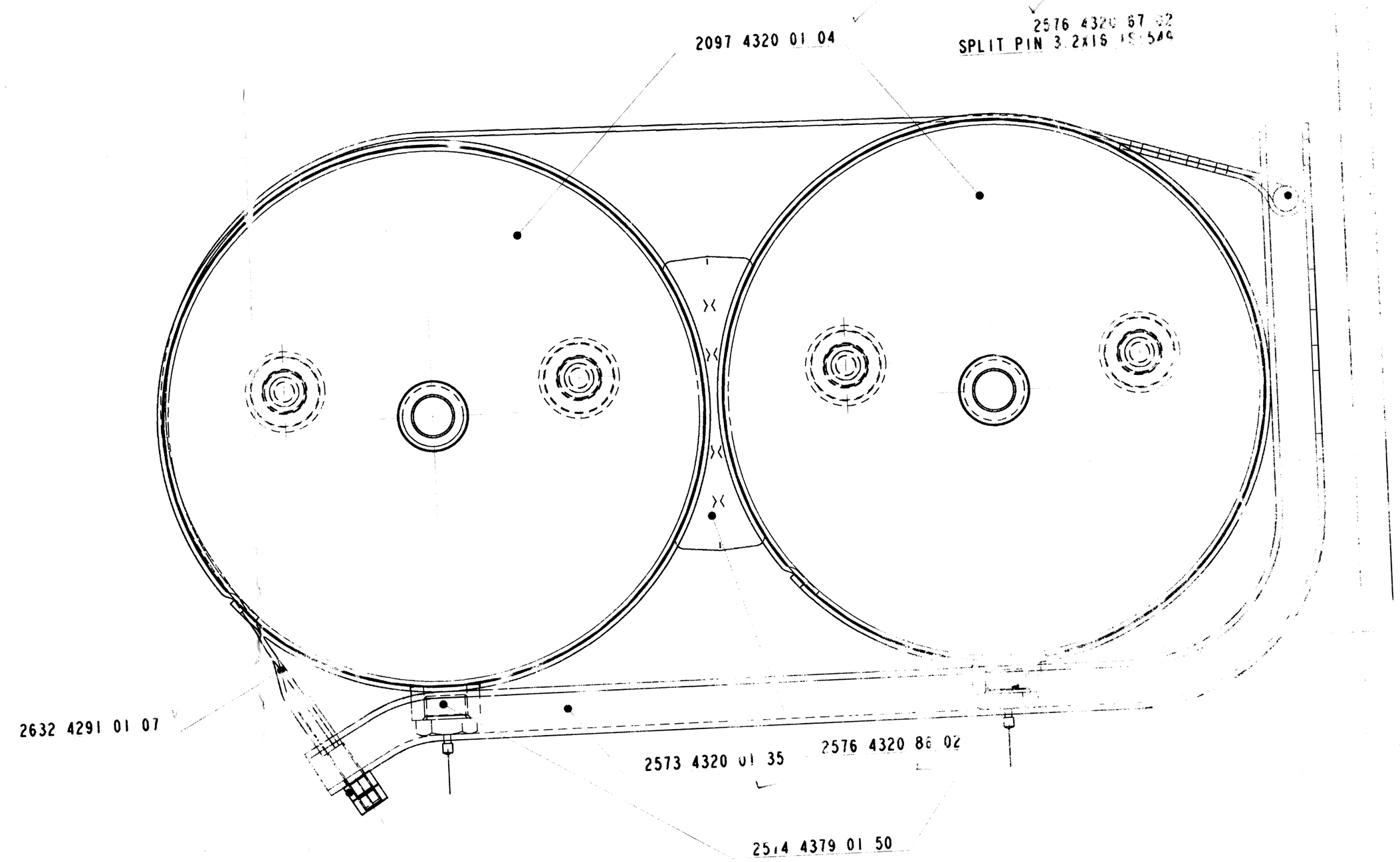

HEX. NUT M10 IS:1364 P3-8

Material Description, Size, Spec. Std. No

Classification of characteristics:
- ● Critical, ▲ Key Instruction
- ◐ Major, (None) Minor
- ● Applies to upper limit
- ● Applies to lower limit

Date	Mod. No.	Sl.No.	Zone
28/11/09	05JM204 ADD:039		

NEW RELEASE

Modification	Ch'd	Appd

This drawing is the sole property of Tata Motors Limited. It should not be copied or communicated to any person without the written approval of Tata Motors Limited.

	SIGN	DATE
2009		
DRN	SMJ	28/11
CHKD	SKD	28/11
APPD	SSH	28/11

Scale: 1:1

Fin.mass Sa to e projection as per Std

Tol. as per Std.
Replaces Drg.
Referred Drg. No
Opp. Hand Drg./ Pt. No
Drg./Part No 2198 4320 01 01
Sheet No
Sheet

Product/Group No. LPTA 715 10/232 S-CAB

Drg./Part Designation
KIT ASSEMBLY
AIR TANK (FOR VOSS) 232 STARP BUS

TATA MOTORS LIMITED

Machining Deviation as per ISO 2768 m

Machining Deviations as per ISO 2768 m			
	1000	2000	

Class 3 ISO 2768

SURFACE ROUGHNESS SYMBOLS / VALUES IN µm Ra

Symbol	N12	N11	N9	N7	N5	N3	N5	N5	N5
							200		HRD & GRD

215

186