OFB

NOTE:

1. LOCATION OF DIMENSION 18h8, MACHINED AND MILLED, ACCORDING TO DIMENSION AS MEASURED ON EACH HOLD-DOWN AT ASSEMBLY WITH BARREL (SEE BARREL ASSEMBLY DRAWING).

THIS DRAWING/DOCUMENT CONTAINS COMPANY PROPRIETARY INFORMATION. USE OR DISCLOSURE IN WHOLE OR IN PART SHALL NOT BE MADE WITHOUT THE WRITTEN PERMISSION OF OFB

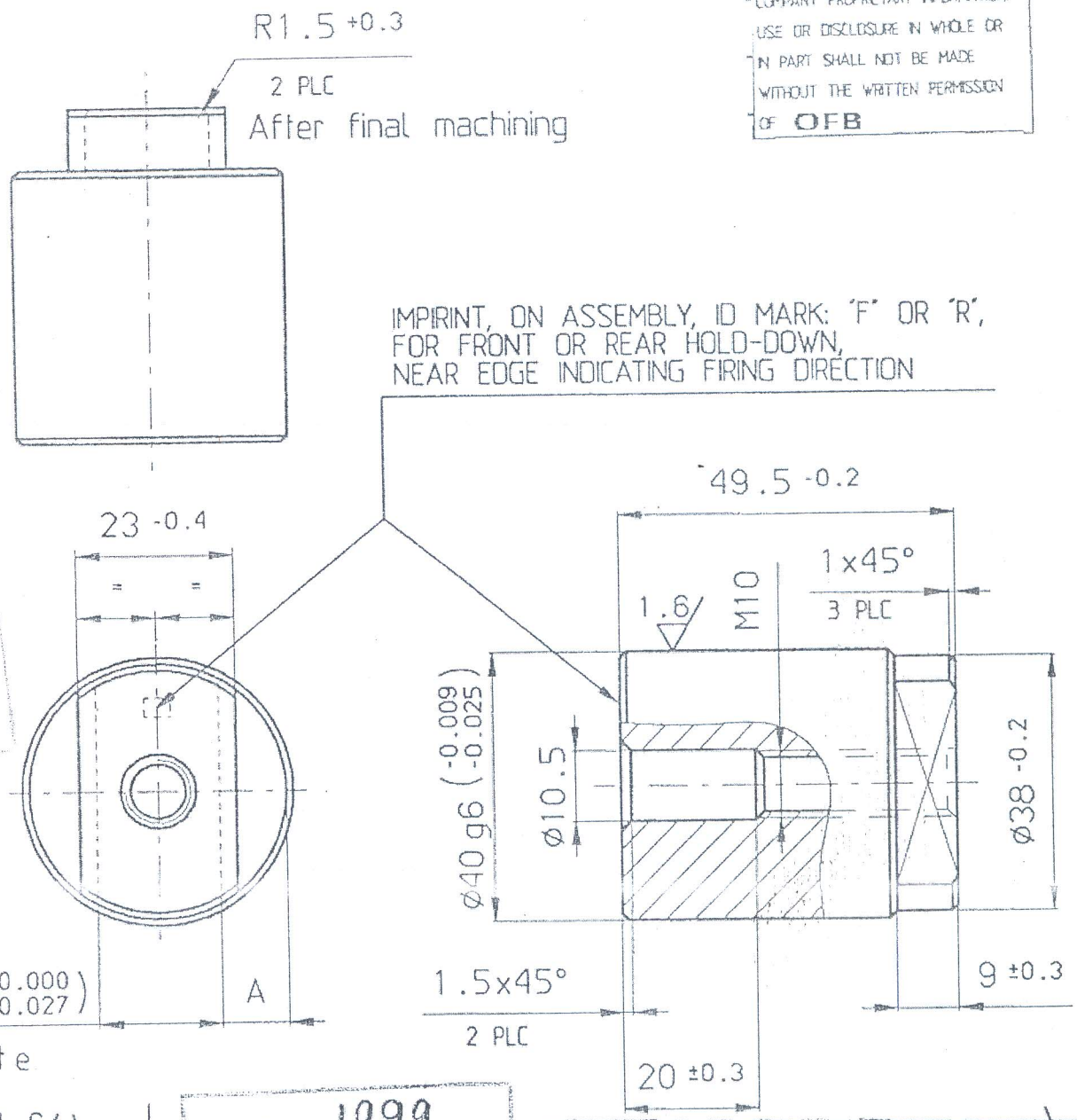

See note

6.3 (1.6)

MACHINING INSTRUCTIONS

I.D. No. 1999
Location 01/04/01

18912-W
Dt. 27-5-2005
DRAWING SEALED
CQA(W)
CQA (W), JABALPUR

UNSPECIFIED TOLERANCES FOR DIMENSIONS AND ANGLES
DIMENSIONS
ANGLES

UPDATED

PART NO. SHARANG 130/155MM_UG_OFB_SLB

Sh: 1
of: 1

PREPD
CHD
JWM/DO

APPROVED
DO/DO
DIR/ODC

HEAT TREATMENT

FINISH PHOSPHATE COATING ACCORDING TO DOD-P-16232 TYPE M CL. 2

ASSEMBLY 176-1002

SCALE 1:1
SIZE A4

ORDNANCE DEVELOPMENT CENTRE, OFC, KANPUR

MATERIAL L=57
ROUND 45 DIN 1013-34CrNiMo6

NAME FIXING PIN

PART NO. 176-1185