DRG.No.	IC	SS	S	AA	A	C	SST
	0204	03	02	00	00	002	00DB

GEN. TOL. FINE/MEDIUM/COARSE
CLASS TO IS: 2102

DRG. CONVENTIONS CONFIRM TO INDIAN STD.
DIMN. IN mm UNLESS OTHERWISE STATED

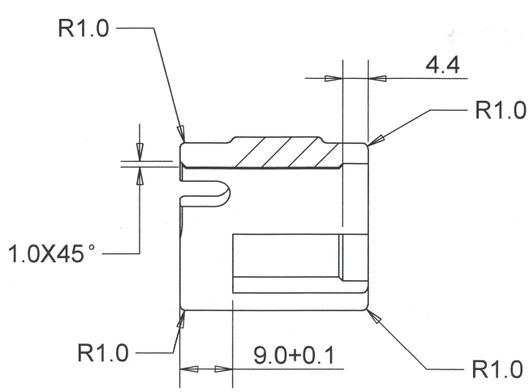

SECTION A-A
SCALE 1 : 1

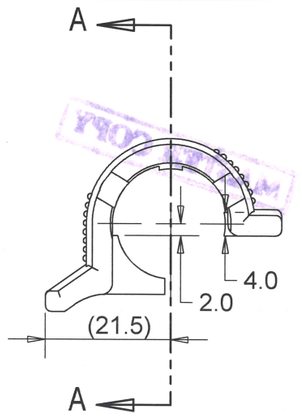

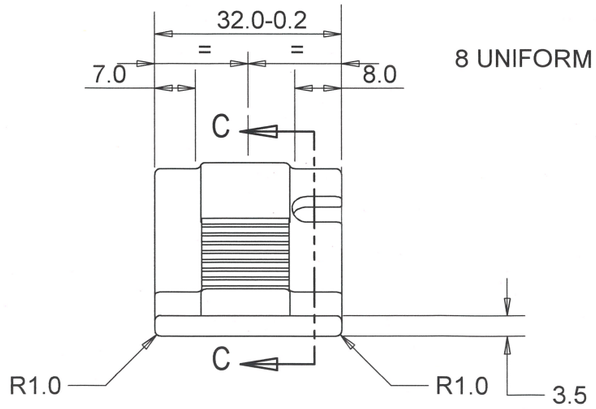

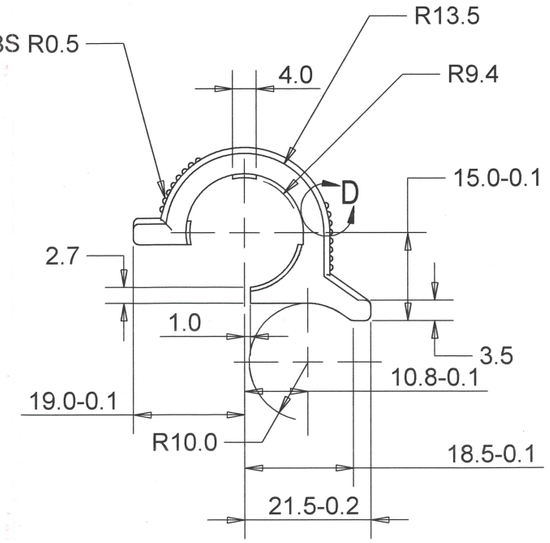

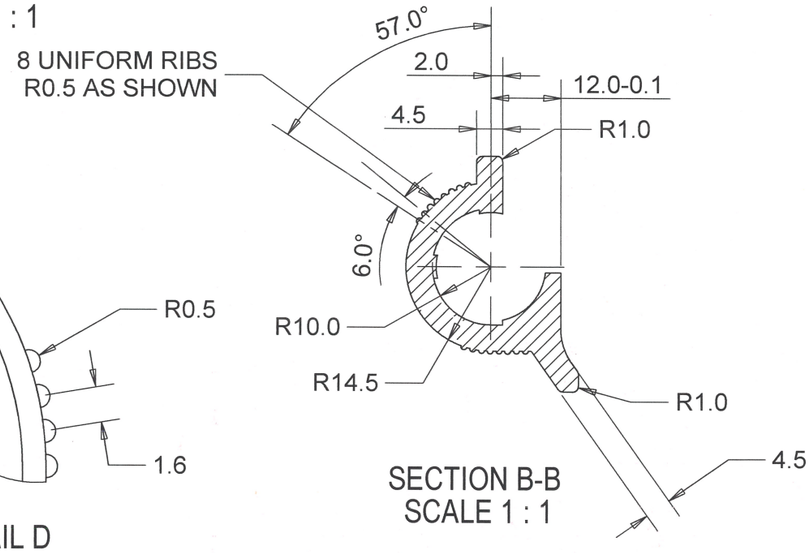

SECTION B-B
SCALE 1 : 1

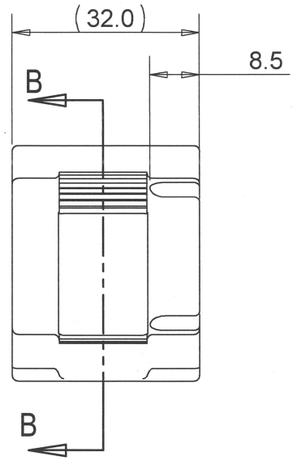

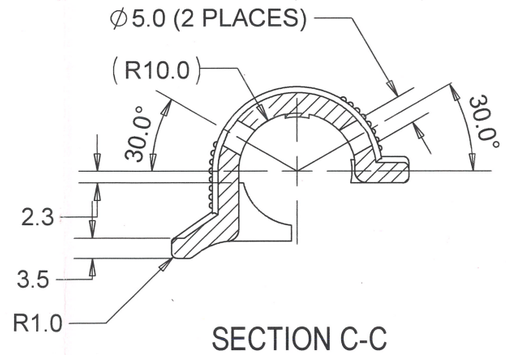

SECTION C-C
SCALE 1 : 1

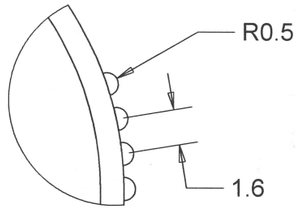

DETAIL D
SCALE 4 : 1

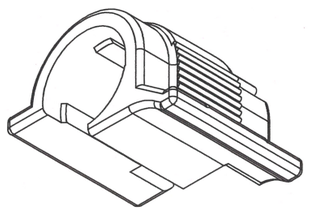

NOTES:–

1) REMOVE ALL SHARP EDGES AND BURRS.

2) TOL. FOR ANGLES ± 30' UNLESS OTHERWISE STATED

Sr. No.	DATE	AUTHORITY	BRIEF RECORD	ZONE	CD	GO
1	26/3/16	M–31	DRG. REVISED	–		

SIGN

SD | CHD. | APPD. | DATE 26/03/2016 For Director | SEALED | DATE

MATERIAL :– LONG FIBER REINFORCED NYLON 66 (GF:20%) Gd–RePlet 312001 HI HS1JBK OR EQUIVALENT

PROTECTIVE FINISH :–

SCALE:– 5.1 | EST. MASS

TITLE :–

DESIGN AUTHORITY
ARDE
PUNE 411021

GAS CYLINDER COVER MOULDING

DRG.No. 0204 (IC) 03 (SS) 02 (S) 00 (AA) 00 (A) 002 (C) 00DB (SST)

PART No. | DS CAT. No. | AHSP