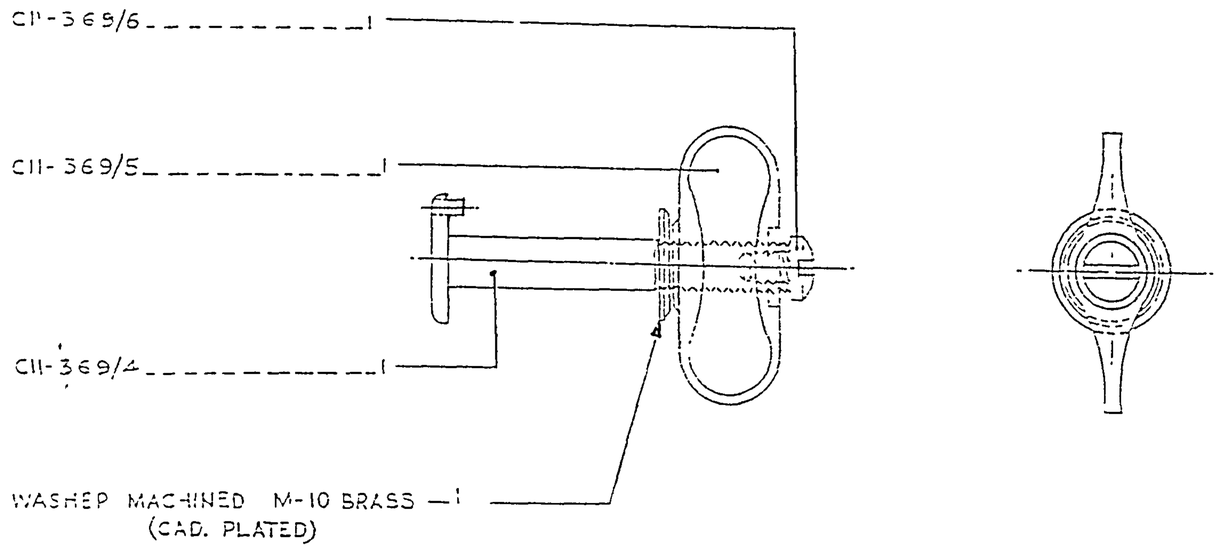

AMENDMENTS	CHD	SIG	DATE
D.C.-5741-I:- DRG REDUCED & NEW COPY SEALED IN SUPERSESSION OF EXISTING ONE.			28.9.93

FOR EXPLANATION OF DIMENSIONING ETC, SEE CQA(1) CODE No 001-1992
THIRD ANGLE PROJECTION
DIMENSIONS ARE IN mm

DRN	SH/-	APPROVED
TCD	SH/-	FOR SH/- CONTROLLER CQA (1) CODE
CHD	SH/-	
CHD	SH/-	DATE - 27.1.71

MATL & SPEC - SEE DETAILS

USED ON	
BASED ON	
CAT/PT No	5340-008843

FINISH & SPEC - SEE DETAILS

DRG No	C11-369/SA-1
SCALE	: 1 SH OF

BOLT ASSEMBLY, CLAMP

D.C.(1):-0586-1(P), 3594-1, 5130-1, 5741-I

DATE: 6.8.93

REPLACED BY D.C.(1) IN THIS UNIT
REPLACED BY D.C.(1) ON ENGINEERING DRWG
REPLACED BY D.C.(1) ON ENGINEERING DRWG
REPLACED BY D.C.(1) ON ENGINEERING DRWG
REPLACED BY D.C.(1) ON ENGINEERING DRWG

(5B)

	CAT./PT. No.	NOMENCLATURE	No. PER ASSY.	DRAWING No.
		SCHEDULE OF PARTS COMPRISING.		
(a)		TRIPOD, FIRE CONTROL INSTRUMENT, 101 A		
	5340-008843	BOLT, ASSEMBLY CLAMP		CII-369/SA-1.
(b)	5306-009086	BOLT, TOGGLE	1	CII-369/4
	5310-014997	NUT, CLAMP	1	CII-369/5
	5305-013325	SCREW, DRIVE	1	CII-369/6
		WASHER MACHINED M 10-BRASS (CAD. PLATED).	1	

POLYESTER NEGATIVE PREPARED AT CQA(I) D.DUN
PREPARED BY:- SUNIL NANDA
CHECKED BY:- Sukhdev DATE:- 6.8.93

D.C.(I):-0586-I(P), 0891-I(P), 3594-I, 5430-I.
5741-I.

9B

AMENDMENTS	SIG.	DATE
D.C.:-5741-I:-POLY. NEG. PREPARED & NEW COPY SEALED IN REPLACEMENT OF EXISTING ONE		12.8.93
(b) D.C.(I):-5430-I. NOMS. AMENDED & CAT/PT NOS. ADDED.		6.11.90
D.C.(I) I-3594-I:- SCH. SEALED.		7.7.77
(a) D.C.(I) I-0891-I(P). MAIN NOM. AMENDED.		29.9.75
D.C.(I) I-0586-I(P). SCH. PROV. SEALED.		4.12.71

DRAWN	TRACED	CHECKED	APPROVED
Rasumjan	Rasumjan	M. Sawhney	FOR C.I. C.I.I. DEHRADUN

SCHEDULE FOR DRG. No.
CII-369/SA-1

SCHEDULE FOR CAT/PT. No. (b)
5340-008843

SHTS. SHT.

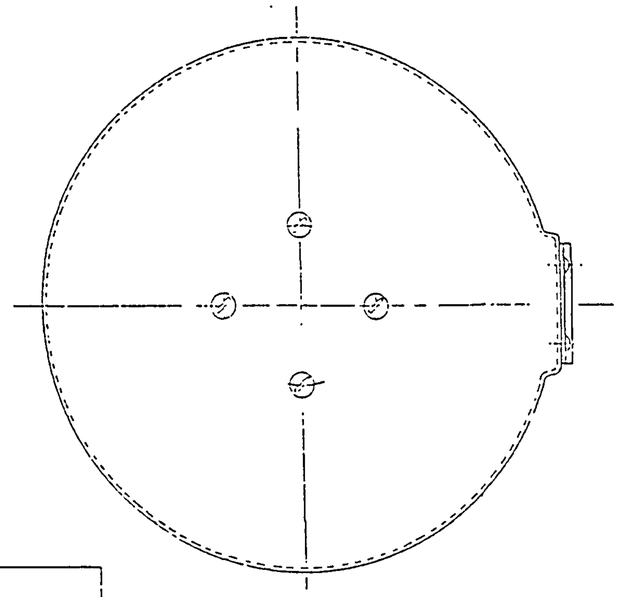

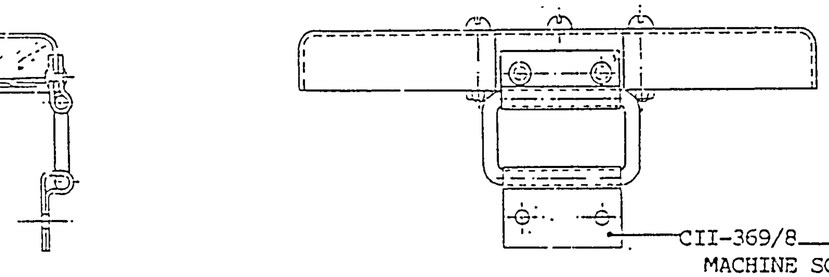

CII-369/10 ____ 1

CII-369/7 ____ 1

CII-369/11 ____ 1

CII-369/9 ____ 1

MACHINE SCREW, RD HD, M-5X20 BRASS ____ 4

NUT, HEX, M-5, BRASS ____ 4

CII-369/8 ____ 1

MACHINE SCREW, RD.HD., M-5x10, BRASS ____ 2

NUT, HEX, M-5 BRASS ____ 2

RIVETS LUMINIUM, FLAT HD. 4 DIAx8 LG. ____ 2

D.C.(I):-0586-I(P), 3594-I, 5430-I, 5741-I.

REDUCED DRG. PREPARED AT CQA(I) DEHRA DUN
PREPARED BY : SUNIL NAUD.
CHECKED BY : [signature]
DATE: 6.8.93

COVER

AMENDMENTS	CHD	SIG	DATE
D.C:-5741-I:-DRG REDUCED & NEW COPY SEALED IN SUPERSESSION OF EXISTING ONE.	[illegible]	[illegible]	12.8.93

FOR EXPLANATION OF DIMENSIONING ETC, SEE CQA(I) GUIDE No 001-1992.
THIRD ANGLE PROJECTION
DIMENSIONS ARE IN mm

DRN	Sd/-	APPROVED Sd/- FOR CONTROLLER CQA (I) DDUN
TCD	Sd/-	
CHD	Sd/-	
CHD		DATE:-27.11.71.

MATL & SPEC:-
AS ON DETAILS

USED ON	
BASED ON	
CAT/PT No	1290-000550

FINISH & SPEC:-
AS ON DETAILS

DRG No.	CII-369/SA-2
SCALE 1 : 1	SH OF

5B

CAT/PART No.	NOMENCLATURE SCHEDULE FOR PARTS COMPRISING	No. PER ASSY	DRAWING No.
(a)	TRIPOD, FIRE CONTROL INSTRUMENT, 101 A		
1290-000550	COVER		CII-369/SA-2
1290-000568	BLOCK, LOCATING	1	CII-369/7
5340-008844	HINGE, BUTT	1	CII-369/8
	MACHINE SCREW, RD. HD, M-5X10 BRASS	2	
	NUT HEX., M-5 BRASS	2	
(b)	RIVET ALUMINIUM, FLAT HD. 4 DIA. X 8 LG.	2	
5340-008908	PLATE.	1	CII-369/9
	MACHINE SCREW, RD.HD, M-5X20 BRASS	4	
	NUT, HEX, M-5 BRASS	4	
5340-008845	PLATE	1	CII-369/10
5310-014996	WASHER, FLAT	1	CII-369/11

PCLYESTER NEGATIVE PREPARED AT CQA(I) D.DUN
PREPARED BY:- SUNIL NANDA
CHECKED BY:- DATE:- 6.8.93

D.C.(I):- 0586-I(P), 0891-I(P), 3594-I, 5430-I.
5741-I.

9B

			PREPARED	TRACED	CHECKED	APPROVED
						FOR CHIEF INSP. CII DEHRA DUN
D.C:- 5741-I:- POLY. NEG. PREPARED & NEW COPY SEALED IN REPLACEMENT OF EXISTING ONE		12.8.93	SCHEDULE FOR DRAWING No. CII-369/SA-2			
(b) D.C.(I):- 5430-I. NOMS. AMENDED & CAT/PT. Nos. ADDED		6.11.90				
D.C.(I):- 3594-I:- SCH. SEALED.		7.7.77				
(a) D.C.(I):- 0891-I(P). MAIN. NOM. AMENDED.		29.9.75	SCHEDULE FOR CAT/PART No. 1290-000550 (h)			
D.C.(I):- 0586-I(P). SCH. PROV. SEALED.		4.12.71				
AMENDMENTS	SIG.	DATE	- SHTS.			SHT:-

D.C.(I):-0586-I(P),0891-I(P),3594-I,5430-I,5741-I.

REDUCED DRG. PREPARED AT CQA(I) DEHRA DUN
PREPARED BY : SUNIL NANDA
CHECKED BY : Shubhakar
DATE: 6.8.93

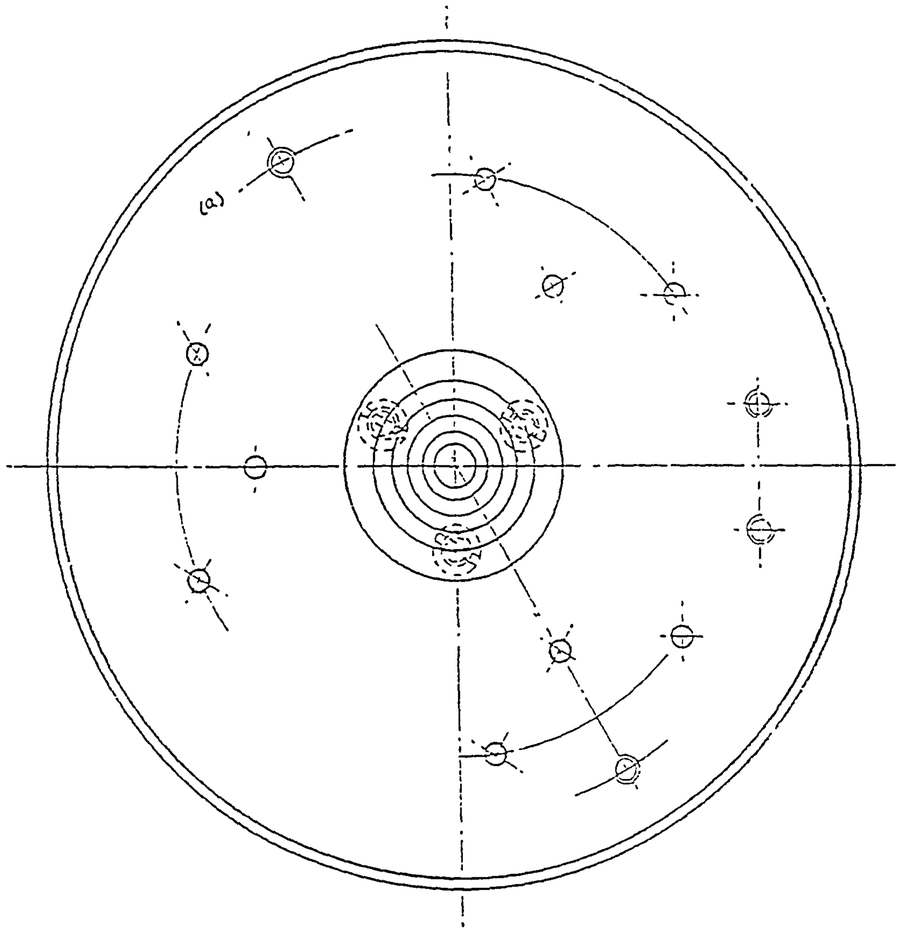

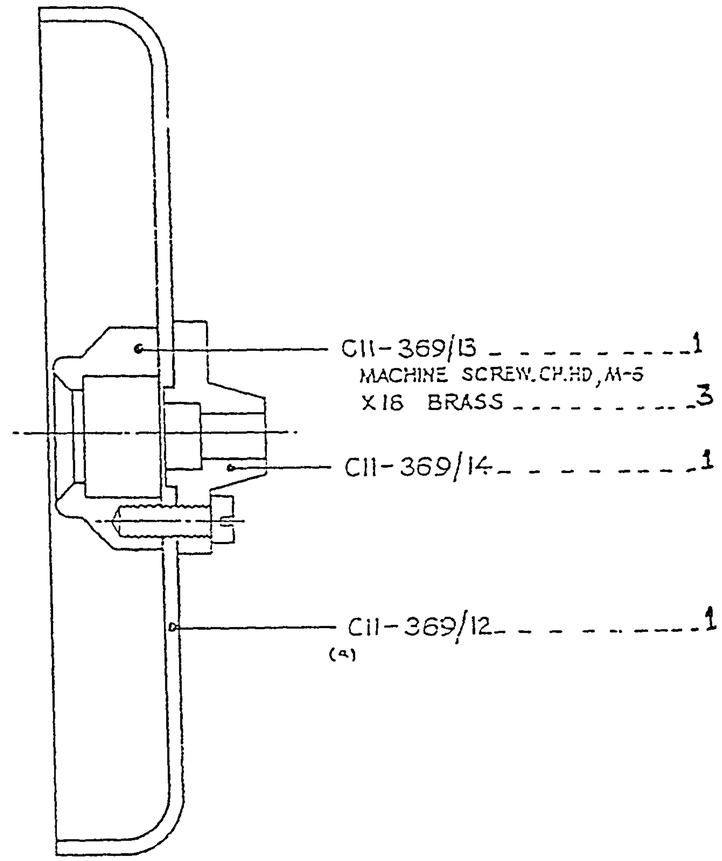

HEAD CARRIER

AMENDMENTS	CHD	SIG	DATE
D.C.-5741-I/-DRG. REDUCED & NEW COPY SEALED IN SUPERSESSION OF EXISTING ONE			12.8.93

FOR EXPLANATION OF DIMENSIONING ETC., SEE CQA(I) GUIDE No 001-1992.
THIRD ANGLE PROJECTION
DIMENSIONS ARE IN mm

MATL & SPEC:-
SEE DETAILS

FINISH & SPEC:-
SEE DETAILS

DRN	Sd/-	APPROVED
TCD	Sd/-	FOR Sd/- CONTROLLER CQA (I) DDUN
CHD	Sd/-	
CHD		DATE:- 27.11.71
USED ON		
BASED ON		
CAT/PT No.	1290-000549	
DRG No.	C11-369/SA-3	
SCALE	:	SH OF

5B

	CAT/PART No	NOMENCLATURE SCHEDULE OF PARTS COMPRISING	No. PER ASSY	DRAWING No
		TRIPOD, FIRE CONTROL INSTRUMENT, 101A		
(b)	1290-000549	HEAD CARRIER		C11-369/SA3
(a)				
	5340-008909	PLATE, RETAINING	1	C11 369/12
(a)				
	5365-005917	RING, RETAINING	1	C11-369/13
		MACHINE SCREW, CH.HD. M6X18 BRASS	3	
	5325-000568	SOCKET	1	C11-369/14

POLYESTER NEGATIVE PREPARED AT CQA(I) D.DUN
PREPARED BY:- SUNIL NANDA
CHECKED BY:- Satya Prakash DATE:- 6.8.93

D.C.(I):-0586-I (P), 0530-I (P), 3594-I, 5430-I.
5741-I.

98

AMENDMENTS.	SIG.	DATE
D.C:-5741-I:-POLY. NEG. PREPARED & NEW COPY SEALED IN REPLACEMENT OF EXISTING ONE		12.8.93
(b) D.C.(I):-5430-I. NOMS. AMENDED & CAT/PT. Nos. ADDED		6.11.90
D.C.(I)-3594-II- SCH. SEALED		7.7.77
(a) D.C.(I)-0891-I(P). NOM. AMENDED. FL442 SAR SCREW DELTD		29.9.75
D.C.(I)-0586-I(P). SCH. PROV. SEALED.		4.12.71

DRAWN	TRACED	CHECKED	APPROVED
			FOR C.I. C.I.I. DEHRADUN

SCHEDULE FOR DRG. No.
C11-369/SA-3

SCHEDULE FOR CAT/PT. No (b)
1290-000549

SHTS. SHT.

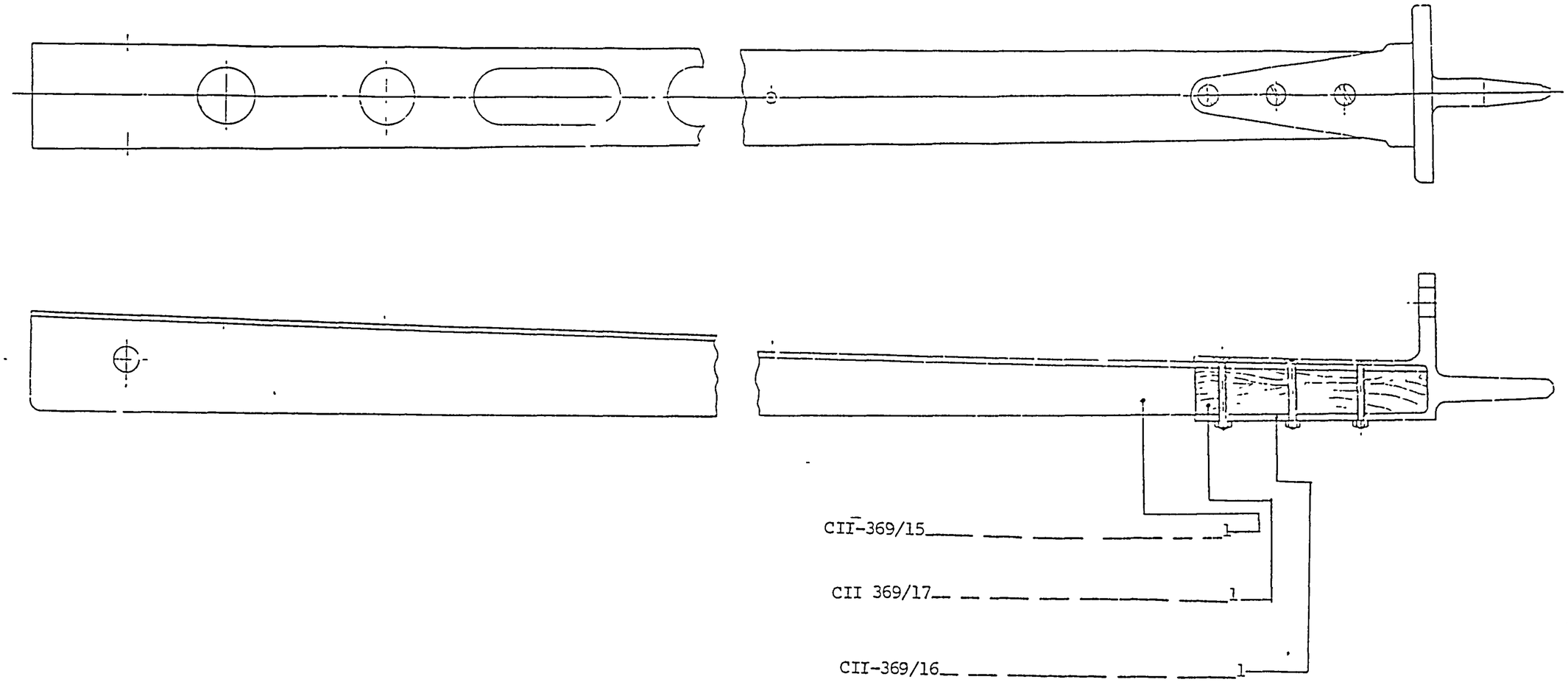

CII-369/15	1
CII 369/17	1
CII-369/16	1
MACHINE SCREW,C'SK.HD M3.5x25-MS	3
NUT,HEX,M3,5-MS	3

D.C.(I):-0586-I(P),3594-I,5430-I,5741-I.

REDRAWN DRG. PREPARED AT CQA(I) DEHRA DUN
DRAWN BY : sunil nanda
CHECKED BY : Shah
DATE: 6.8.93

HOUSING UNIT, TRIPOD

AMENDMENTS	CSD	SIG	DATE
DC-5741-I-DRG REDUCED & NEW COPY SEALED IN SUPERSESSION OF EXISTING ONE.			12.8.93

FOR EXPLANATION OF DIMENSIONING ETC, SEE CQA(I) GUIDE No 001-1992.
THIRD ANGLE PROJECTION
DIMENSIONS ARE IN mm

MATL & SPEC:-
AS ON DETAILS

FINISH & SPEC:-
AS ON DETAILS

DRN	sd/-	APPROVED
TCD	sd/-	FOR sd/- CONTROLLER CQA (I) DCN
CHD	sd/-	
CHD	sd/-	DATE - 27.11.71
USED ON		
BASED ON		
CAT/PT No.	3950-000142	
DRG No.	CII-369/SA-4	
SCALE	1 : 1	SH OF

(5B)

	CAT/PART No	NOMENCLATURE	No PER ASSY	DRAWING No
		SCHEDULE OF PART COMPRISING		
(a)		TRIPOD, FIRE CONTROL INSTRUMENT, 101A		
	3950-000142	HOUSING UNIT, TRIPOD		C11-369/SA4
	1290-000552	LEG	1	C11-369/15
	1290-000551	SHOE	1	C11-369/16
(b)		MACHINE SCREW, C'SK.HD, M-3.5X25-MS	3	
		NUT, HEX, M 3.5-MS	3	
	5330-012410	PACKING, MATERIAL	1	C11-369/17

POLYESTER NEGATIVE PREPARED AT CQA(I) D.DUN
PREPARED BY:- SUNIL NANDA
CHECKED BY:- [signature] DATE:- 6.8.93

D.C.(I):-0586-I(P), 0891-I(P), 3594-I, 5430-I.
5741-I.

98

AMENDMENTS	SIG	DATE
D.C:-5741-I:-POLY. NEG. PREPARED & NEW COPY SEALED IN REPLACEMENT OF EXISTING ONE.		12.8.93
(b) D.C.(I)-5430-I. NOMS. AMENDED & CAT/PART No ADDED.		6.11.90
D.C.(I):-3594-I SCH. SEALED.		7.7.77
(a) D.C.(I)-0891-I(P). MAIN NOM. AMENDED.		22.9.75
D.C.(I):-0586-I(P). SCH. PROV. SEALED.		4.12.71.

DRAWN	TRACED.	CHECKED	APPROVED
[signature]	[signature]	[signature]	

SCHEDULE FOR DRG No
C11-369/SA-4

FOR C.I C11 DEHRADUN

SCHEDULE FOR CAT/PART No (b)
3950-000142

SHTS SHTS

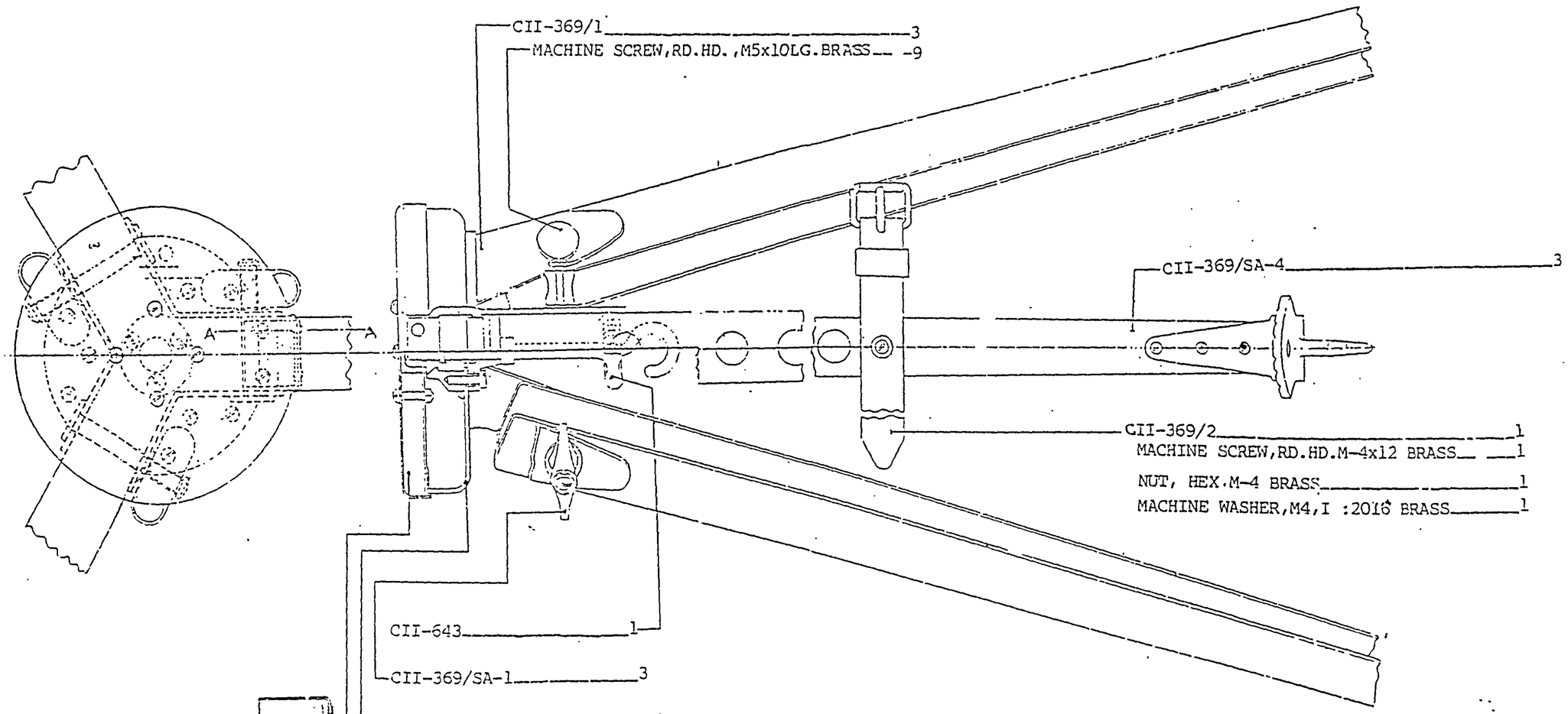

SECTION 'AA'

D.C (I):-0586-I(P),0891-I(P),3594-I, 4672-I,5741-I.

REDUCED DRG. PREPARED AT CQA(I) DEHRA DUN
PREPARED BY : sunil nanda
CHECKED BY : DATE: 6.8.93

TRIPOD FIRE CONTROL INSTRUMENT 101A

AMENDMENTS	CHD	SIG	DATE
D.C:-5741-I:- DRAWING REDUCED & NEW COPY SEALED IN SUPERSESSION OF EXISTING ONE.			12.8.93

FOR EXPLANATION OF DIMENSIONING ETC, SEE CQA(I) GUIDE No 001-1992.
THIRD ANGLE PROJECTION
DIMENSIONS ARE IN mm

DRN	Sd/-	APPROVED
TCD	Sd/-	FOR Sd/- CONTROLLER
CHD	Sd/-	CQA (I) D.DUN
CHD	Sd/-	DATE :- 27.11.71

MAIL & SPEC:-
AS ON DETAILS

USED ON	
BASED ON	
CAT/PT No.	1290-000252

FINISH & SPEC:-
AS ON DETAILS

DRG No.	CII-369
SCALE	: 1 SH OF

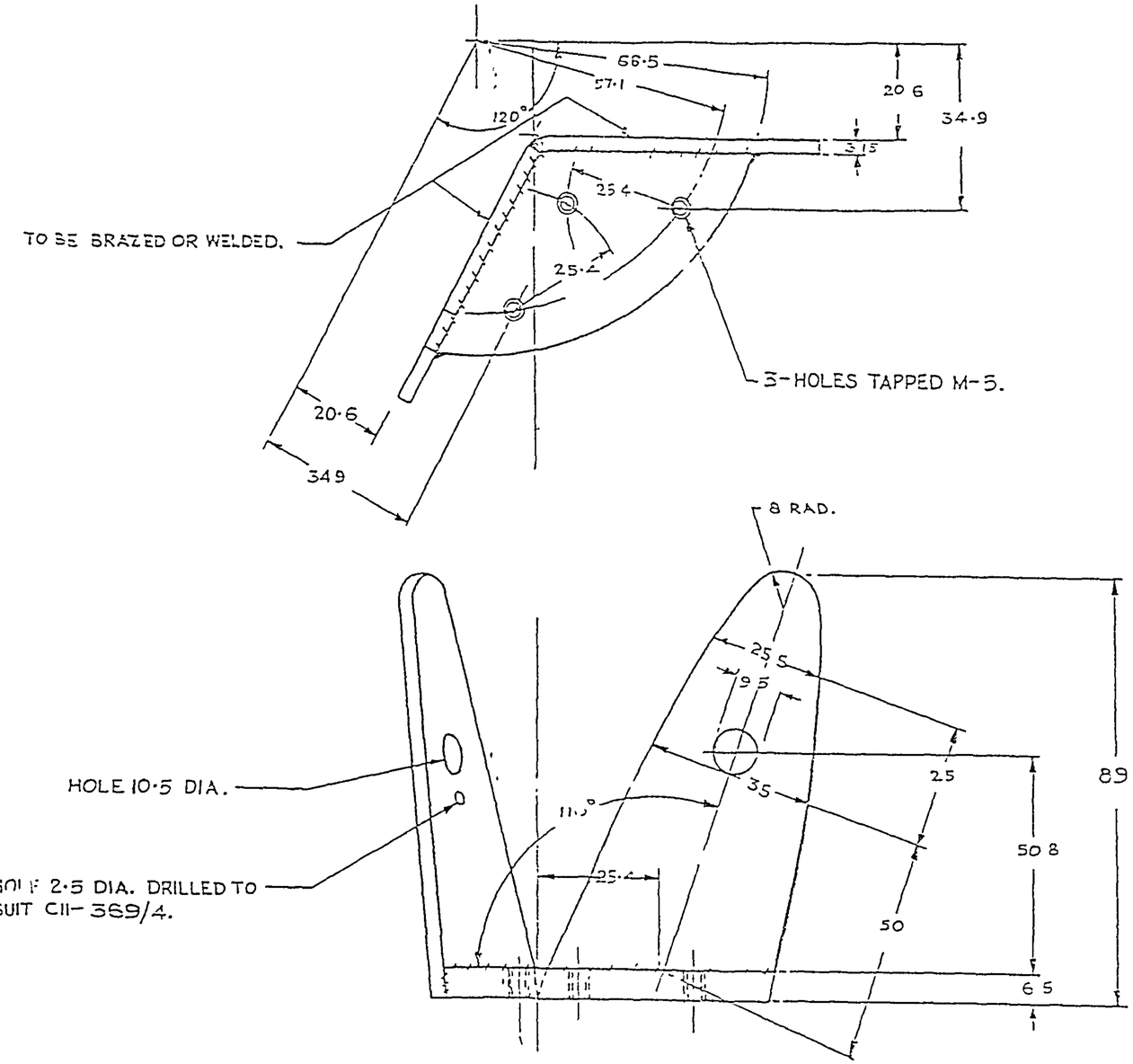

(c)

MATL :- ALUMINIUM ALLOY SHEET 64430 WP TO IS:737-1986

(a) FINISH:-

ANODISED AC-5 TO IS: 1868-1982 & APPLY PRIMER TO IS: 2075-1962 & PAINTED (ISC-294 TO IS: 5-1978) TO IS: 8983-1978

AMENDMENTS	CHD	SIG	DATE
DC:-5741-I-DRG REDUCED & NEW COPY SEALED IN SUPERSESSION OF EXISTING ONE.			12 8.93
(a) DC:- 5906-I, & FINISH ADDED.			29.11.94

FOR EXPLANATION OF DIMENSIONING ETC, SEE CQA(I) GUIDE No 001-1992.
THIRD ANGLE PROJECTION
DIMENSIONS ARE IN mm

DRN	sd/-	APPROVED FOR CONTROLLER CQA (I) DGDH
TCD	sd/-	
CHD	sd/-	
CHD	sd/-	DATE - 27.11.71.

MATL & SPEC:- SEE DRG.

USED ON	
BASED ON	
CAT/PT No.	5340-008838

FINISH & SPEC:- SEE DRG.

DRG No.	CII-369/1
SCALE 1 : 1	SH OF

BRACKET, HINGE

D.C.(I):-0586-I(P),0891-I(P),3594-I.5430-I.5601-I,5741-I. 5906-I

REDUCED DRG. PREPARED AT CQA(I) DEHRA DUN
PREPARED BY : SUNIL NANDA
CHECKED BY : Sahnkar
DATE: 6.8.93

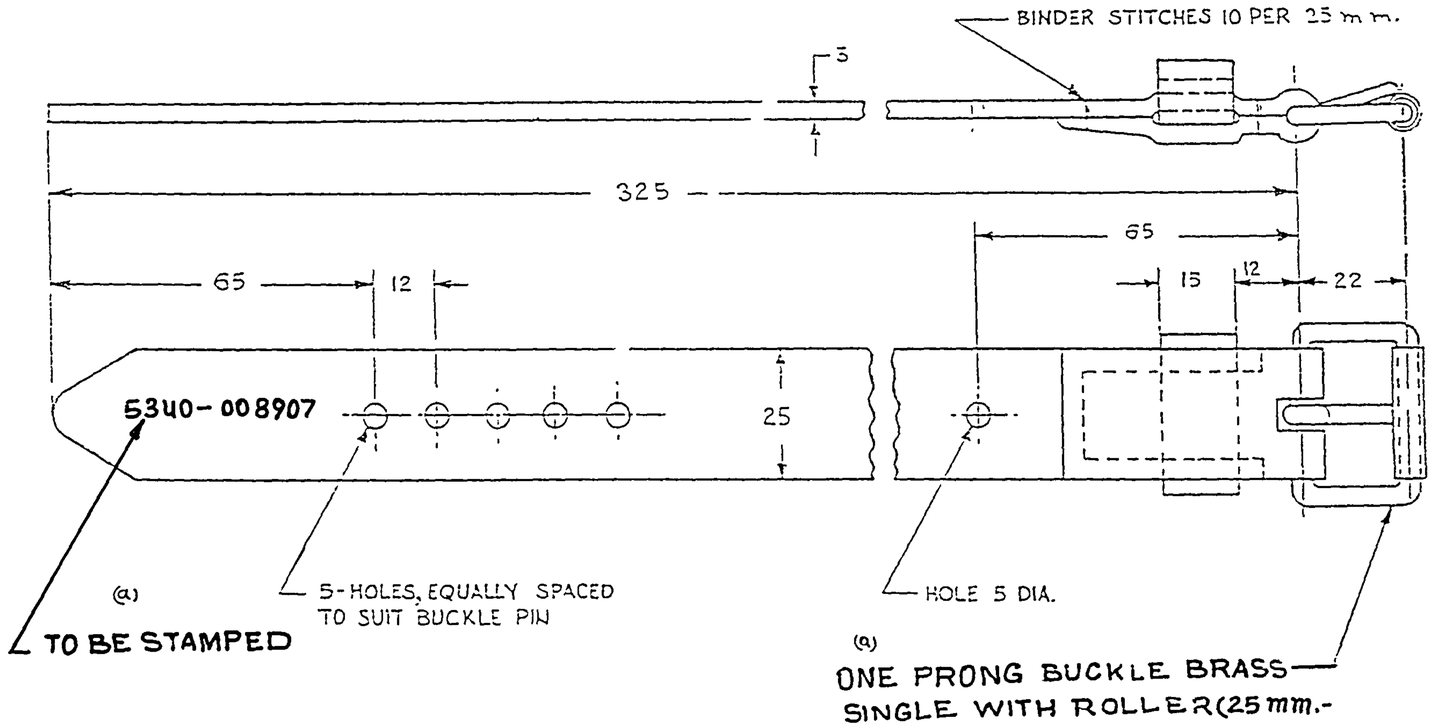

AMENDMENTS	CHD	SIG	DATE
D C:-5741-I:-DRG REDUCED & NEW COPY SEALED IN SUPERSESSION OF EXISTING ONE			12 8 93
(a) DC:- 5906-I, MATL & FINISH, NOTE ADDED.			29.11.94

FOR EXPLANATION OF DIMENSIONING ETC., SEE CQA(I) GUIDE No 001-1992.
THIRD ANGLE PROJECTION
DIMENSIONS ARE IN mm

DRN	sd/-	APPROVED
TCD	sd/-	FOR sd/- CONTROLLER CQA (I) DDUN
CHD	sd/-	
CHD	sd/-	DATE:- 27.11.71.

MATL & SPEC.-
LEATHER BUFFALO, CURRIED TO SPECN. No. IND/GS/594
(a) OR
LEATHER TO IS: 580-1973

USED ON	
BASED ON	
CAT/PT No	5340-008907
DRG No	Cil-369/2
SCALE	1 : 1 SH OF

FINISH & SPEC -
(a) ANTI FUNGUS TREATMENT

STRAP

D.C.(I):-0586-I(P), 3594-I, 5430-I, 5714-I, 5906-I

PREPARED BY CQA(I) DEHRA DUN
DRG. CERTIFIED BY : SUNIL NANDA
CHECKED BY : Sd/- DATE: 6.8.93

POLYESTER NEGATIVE PREPARED AT CQA(I) D.DUN
PREPARED BY:- sunil nanda
CHECKED BY:- Subhakar. DATE:-

FOR EXPLANATION OF DIMENSIONING ETC., SEE CQA(I) GUIDE No. 001-1992.
THIRD ANGLE PROJECTION DIMENSIONS ARE IN m.m.

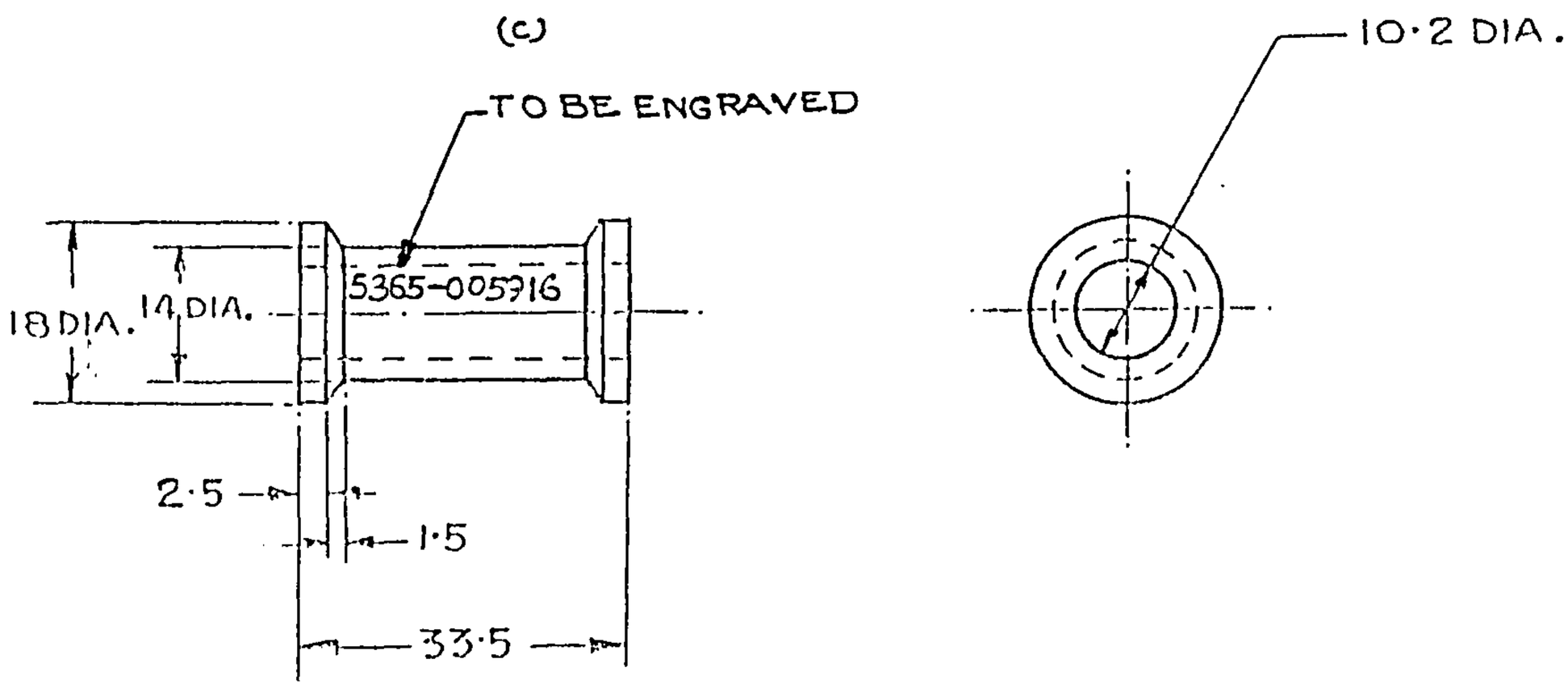

(c)
FINISH:- TO BE ANODISED AC-5 TO IS: 1868-1982
AND EXTERNAL SURFACES, APPLY
PRIME TO IS: 2075-1962 & PAINTED
(ISC-294 TO IS: 5-1978) TO IS: 8983-1978.

(c) DC:- 5906-I, MATL & FINISH AMENDED.		29.11.94	DRAWN	TRACED	APPROVED
D.C:- 5741-I-POLY. NEG. PREPARED & NEW COPY SEALED IN REPLACEMENT OF EXISTING ONE.		12.8.93			FOR CHIEF INSP. CII, DEHRADUN
(b) D.C.(I):- 5430-1. NOM. AMENDED & CAT/PART No. ADDED.		6.11.90	CHECKED		
D.C.(I):- 3594-I:- DRG. SEALED.		7.7.77			
(a) D.C.(I):- 0891-I(P). FINISH. AMENDED.		29.9.76	SCALE:- 1/1		DATE:- 27.11.71
D.C.(I):- 0586-I(P). DRG. PROV. SEALED.		4.12.71	DRAWING No. CII-369/3		
AMENDMENTS	SIG	DATE			
MATL (c) AL. ALLOY, 24534 TO IS:733-1983			CAT/PART No. (b) 5365-005916		
FINISH:- AS ABOVE					
(b) SPACER, SLEEVE			SHT		SHT

D.C.(I):- 0586-I(P), 0891-I(P), 3594-I, 5430-I, 5741-I. 5906-I

(5C) FOR EXPLANATION OF DIMENSIONING ETC., SEE CQA(I) GUIDE No. 001-1992.
THIRD ANGLE PROJECTION — DIMENSIONS ARE IN mm.

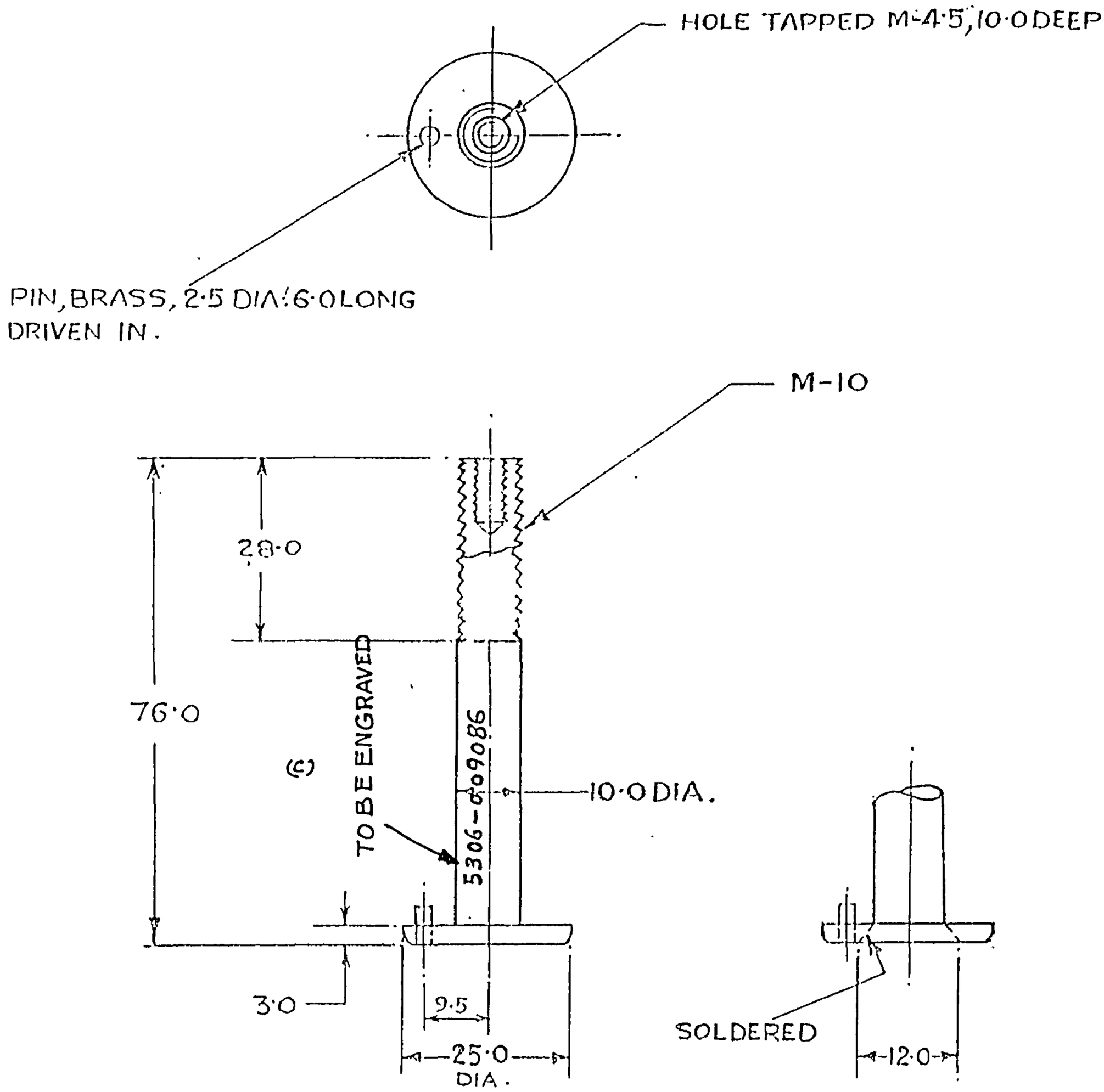

(c)

FINISH: TO BE ANODISED AC-5-TO IS:1868-1982 & EXTERNAL SURFACES, APPLY, PRIMER TO IS:2075-1962 & PAINTED (ISC-294 TO IS: 5-1978) TO IS: 8983-1978.

ALTERNATIVE CONSTRUCTION

(c) DC:- 5906-I, MATL & FINISH AMENDED.		29.11.94	DRAWN	TRACED B.S. Rao	APPROVED. FOR CHIEF INSPECTOR CII, DEHRADUN
D.C:- 5741-I:- POLY NEG. PREPARED & NEW COPY SEALED IN REPLACEMENT OF EXISTING ONE.		12.8.93			
(b) D.C. (I):- 5430-I. NOM. AMENDED & CAT/PART No. ADDED.		6.11.90	CHECKED		
D.C.(I) 1-3597-I:- DRG. SEALED.		7.7.77			
(a) D.C.(I) 1-0891-I(P). FINISH. AMENDED.		29.9.75	SCALE:- 1/1		DATE 27.11.71
D.C. (I):- 0886-I(P). DRG. PROV. SEALED.		4.12.71	DRAWING No. CII-369/4		
AMENDMENTS	SIG	DATE			
MATL AL. ALLOY, 24534 TO IS: 733-1983 (c)					
(a) FINISH:- SEE ABOVE			CAT/PART No. (b) 5306-009086		
(b) BOLT, TOGGLE			SHT.		SHT

POLYESTER NEGATIVE PREPARED AT CQA(I) D.DUN
PREPARED BY:- sunil nanda
CHECKED BY:- S.D. Singh DATE:- 6.8.93

D.C. (I):- 0536-I(P), 0891-I(P), 3594-I, 5430-I.
5741-I.
DC:- 5906-I

POLYESTER NEGATIVE PREPARED AT CQA(I) D.DUN
PREPARED BY:- sunil nanda
CHECKED BY:- DATE:- 6.2.95

FOR EXPLANATION OF DIMENSIONING ETC., SEE CQA(I) GUIDE No. 001-1992.
THIRD ANGLE PROJECTION — DIMENSIONS ARE IN m.m.

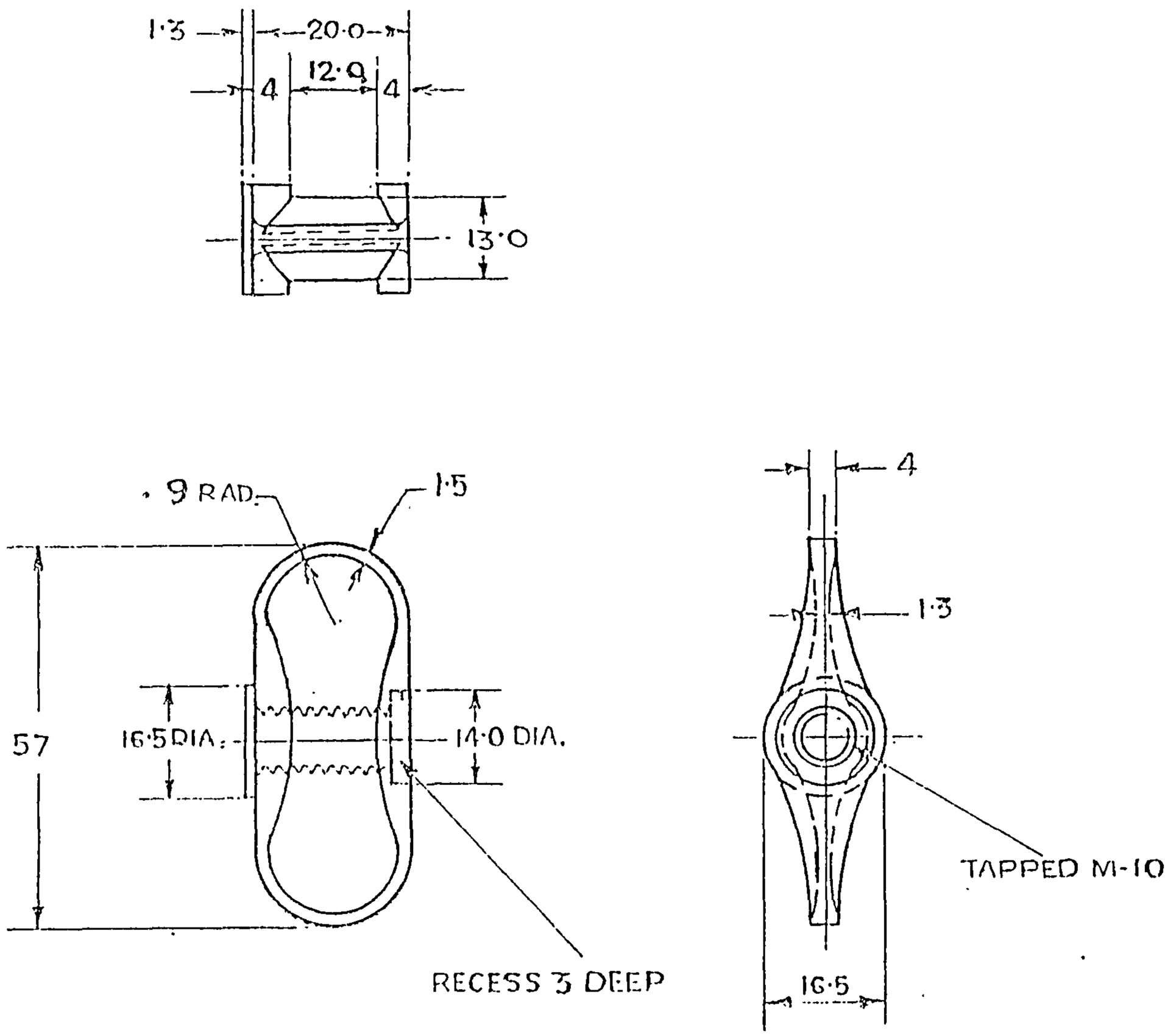

(c)

(c) FINISH:- TO BE ANODISED AC-5 TO IS:1868-1982 & EXTERNAL SURFACES, APPLY PRIMER TO IS: 2075-1962 & PAINTED (ISC-294 TO IS:5-1978) TO IS:8983-1978.

D.C.(P):-2586-I(P), 0891-I(P), 3594-I, 5430-I, 5741-I, 5906-I

(c) DC:- 5906-I, MATL & FINISH AMENDED.		29.11.95	DRAWN	TRACED	APPROVED
D.C:-5741-I:-POLY. NEG. PREPARED & NEW COPY SEALED IN REPLACEMENT OF EXISTING ONE.		12.8.93		B.S. Rawat	FOR
(b) D.C. (I):- 5430-I. NOM. AMENDED & CAT/PART No. ADDED.		6.11.90	CHECKED		CHIEF INSP. CII, DEHRADUN
D.C.(I):-3594-I. DRG. SEALED.		7.7.77			
(a) D.C. (I):-0891-I(P). FINISH. AMENDED.		29.9.75	SCALE :- 1/1		DATE 27-11-71
D.C.(I):-0586-I(P) DRG. PROV. SEALED.		4.12.71	DRAWING No.		
AMENDMENTS	SIG	DATE	CII-369/5		
MATL: AL. ALLOY, 2453 J TO IS:733-1983 (c)			CAT/PART No. (b)		
(a) FINISH:- SEE ABOVE			5310-014997		
(b) NUT, CLAMP			SHT		SHT

POLYESTER NEGATIVE PREPARED AT CQA(I) D.DUN
PREPARED BY:- sunil nanda
CHECKED BY:- Satyam Kaur DATE:- 6.3.93

D.C.(I):- 0586-I(P), 0891-I(P), 3594-I; 3430-I, 5601-I, 5741-I.

FOR EXPLANATION OF DIMENSIONING ETC, SEE CQA(I) GUIDE No.001-1992.
THIRD ANGLE PROJECTION. DIMENSIONS ARE IN mm.

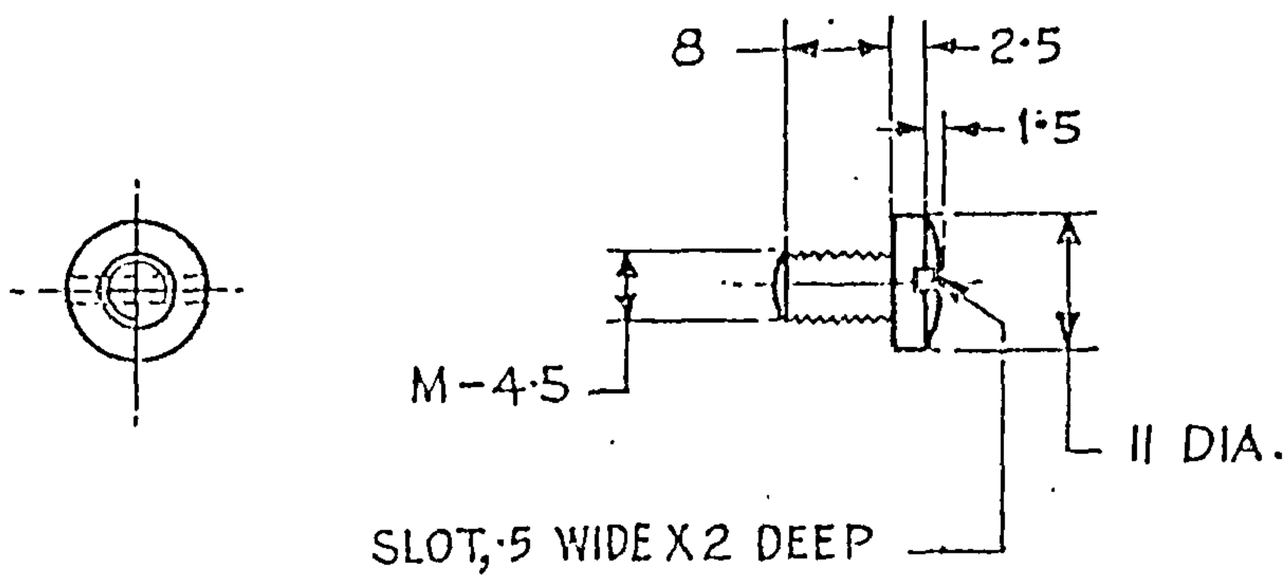

D.C:-5741-I:-POLY. NEG. PREPARED & NEW COPY SEALED IN REPLACEMENT OF EXISTING ONE		12.8.93	DRAWN / TRACED
(c) D.C(I):-5601-I. MATL. & FINISH AMENDED.		22.10.92	APPROVED FOR CHIEF INSP. CII, DEHRA DUN
(b) D.C.(I):-5430-I. NOM. AMENDED & CAT/PART No. ADDED.		6.11.80	CHECKED
D.C.(I):-3594-I. DRG. SEALED.		7.7.77	
D.C.(I):-0891-I(P) FINISH AMENDED.		22.9.75	SCALE - 1/1 / DATE - 27-11-71
D.C.(I):-0586-I(P). DRG. PROV. SEALED.		4.12.71.	DRAWING No. CII - 369/6
AMENDMENTS	SIG.	DATE	

(c) MATL:- BRASS ROD GDE I, HB TO IS:319-1989.

(a) FINISH:- NICKEL CHROME PLATED GDE 4 No. C NI 30 P CYY TO IS:4827-1968.

(b) SCREW, DRIVE

CAT/PART No. (b) 5305-013325

- SHTS SHT-

POLYESTER NEGATIVE PREPARED AT CQA(I) D'DUN
PREPARED BY:- sunil nanda
CHECKED BY:-
DATE:- 6.

FOR EXPLANATION OF DIMENSIONING ETC., SEE CQA(I) GUIDE No: 001-1992.
THIRD ANGLE PROJECTION DIMENSIONS ARE IN mm.

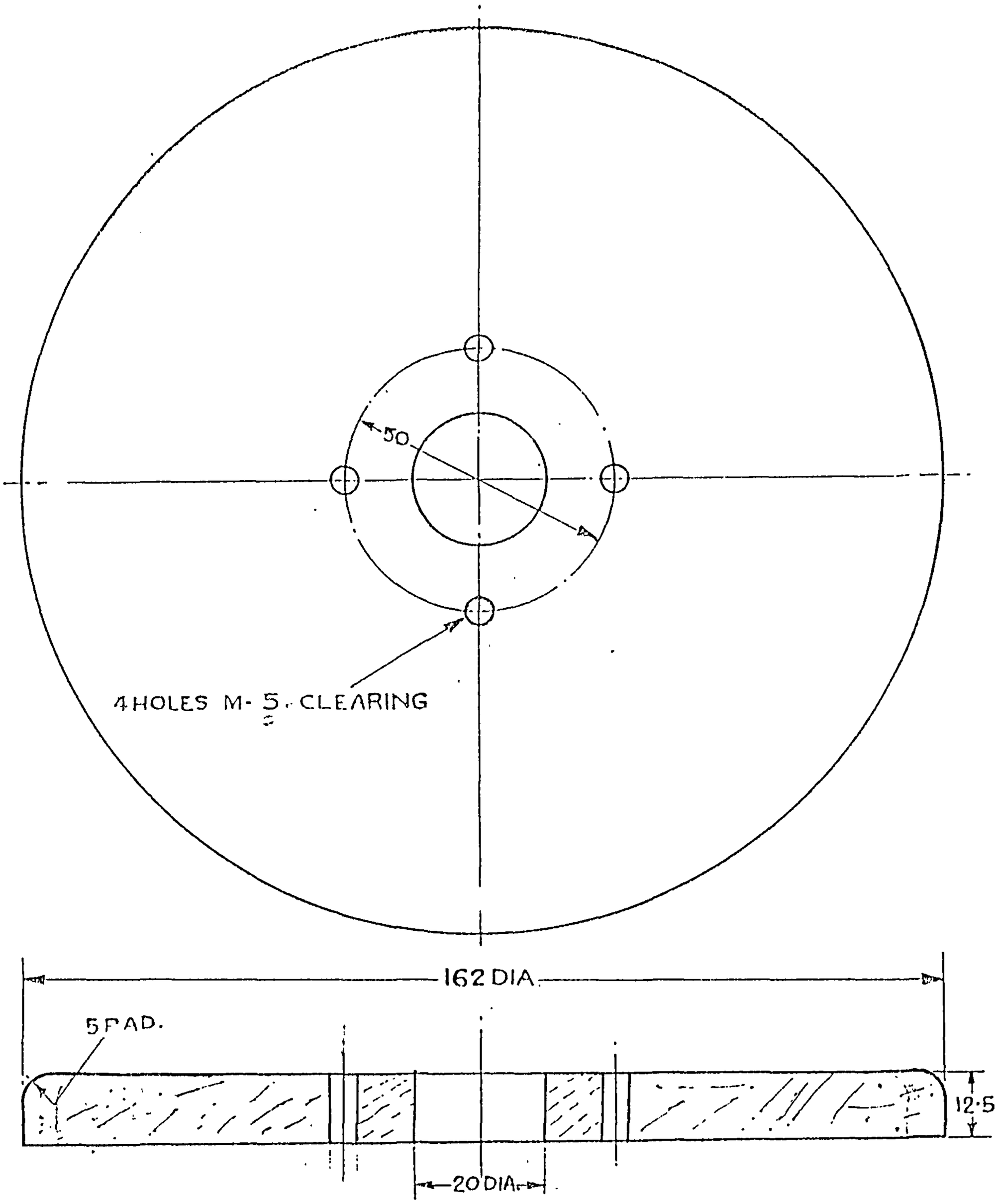

(c) DC:- 5906-I, MATL & FINISH AMENDED.		29.11.94	DRAWN	TRACED	APPROVED
D.C:-5741-I:-POLY. NEG. PREPARED & NEW COPY SEALED IN REPLACEMENT OF EXISTING ONE.		12.8.93		B.S. Rawat	FOR CHIEF INSP. CII, DEHRADUN
(b) D.C.(I):-5430-I. NOM. AMENDED & CAT/PART No ADDED		6.11.90	CHECKED		
D.C. (I):-3594-I:- DRG. SEALED.		7.7.77			
(a) D.C.(I):- 0891-I(P). FINISH AMENDED		22.9.75	SCALE:- 1/1		DATE:-27.11.71
D.C.(I):-0596-I(P). DRG. PROV. SEALED.		4.12.71	DRAWING No. CII-369/7		
AMENDMENTS	SIG	DATE			

(c) MATL.:- WOOD SISOO/DEODAR SEASONED

(a) FINISH: APPLY PRIMER TO IS: 2074-1962, (c) PAINTED (ISC-294 TO IS: 5-1978) TO IS: 8982-1978

(b) BLOCK, LOCATING

CAT/PART No. (b) 1290-000568

SHT SHT

D.C.(I):-0586-I (P), 0891-I(P), 3594-I, 5430-I, 5741-I, 5906-I

POLYESTER NEGATIVE PREPARED AT CQA(I) D.DUN
PREPARED BY:- sunil nanda
CHECKED BY:- DATE:- 6.8.93

FOR EXPLANATION OF DIMENSIONING ETC, SEE CQA(I) GUIDE No.001-1992.
THIRD ANGLE PROJECTION — DIMENSIONS ARE IN mm.

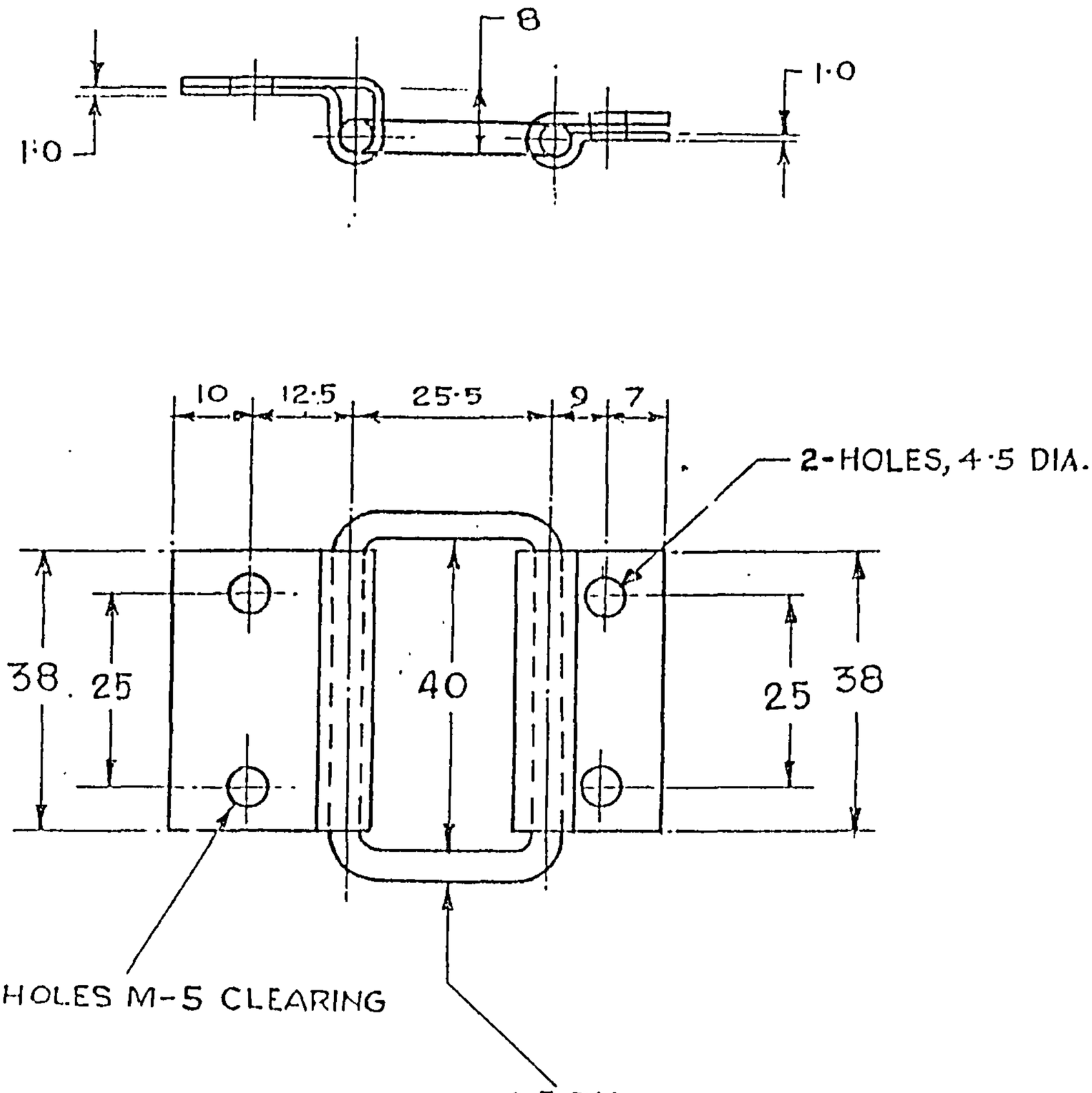

(d) ALUMINIUM ALLOY, 24534 'W' TO IS: 733-1983 WELDED TO FROM COMPLETE LOOP.

FINISH :- ANODISED AC-5 TO 1868-1982
(d) AND APPLY PRIMER TO IS: 2075-1962 & PAINTED (ISC-294 TO IS: 5-1978) TO IS: 8983-1978.

D. C.(I):- C586-I(P), 0891-I(P), 3594-I, 5430-I, 5601-I, 5741-I, 5906-I

AMENDMENTS	SIG	DATE
(d) DC:- 5906-I, MATL & FINISH AMENDED.		29.11.94
D.C:-5741-I:-POLY. NEG. PREPARED & NEW COPY SEALED IN REPLACEMENT OF EXISTING ONE.		12.8.93
c) D.C.(I):- 5601-I. MATL. & FINISH AMENDED.		22.10.92
b) D.C.(I):- 5430-I. NOM. AMENDED & CAT/PART No. ADDED.		6.11.90
D.C.(I):- 3594-I. DRG. SEALED.		7.7.77
(a) D.C.(I):- 0891-I(P). FINISH. AMENDED.		29.9.76
D.C.(I):- 0586-I(P). DRG. PROV. SEALED.		4.12.71

(c) MATL: (d) AL. ALLOY SHEET, 64430 WP TO IS: 737-1986

FINISH:- SEE ABOVE.

(b) HINGE, BUTT

DRAWN	TRACED	APPROVED
		FOR CHIEF INSP. CII, DEHRADUN
CHECKED		
SCALE :- 1/1		DATE:- 27.11.71

DRAWING No. CII-369/8

CAT/PART No. (b) 5340-008844

-SHT SHT-

POLYESTER NEGATIVE PREPARED AT CQA(I) D.DUN
PREPARED BY:- sunil nanda
CHECKED BY:- Satyaprakash, DATE:- 6.8.93.

FOR EXPLANATION OF DIMENSIONING ETC., SEE CQA(I) GUIDE No. 001-1992.
THIRD ANGLE PROJECTION
DIMENSIONS ARE IN mm. UNLESS OTHERWISE STATED

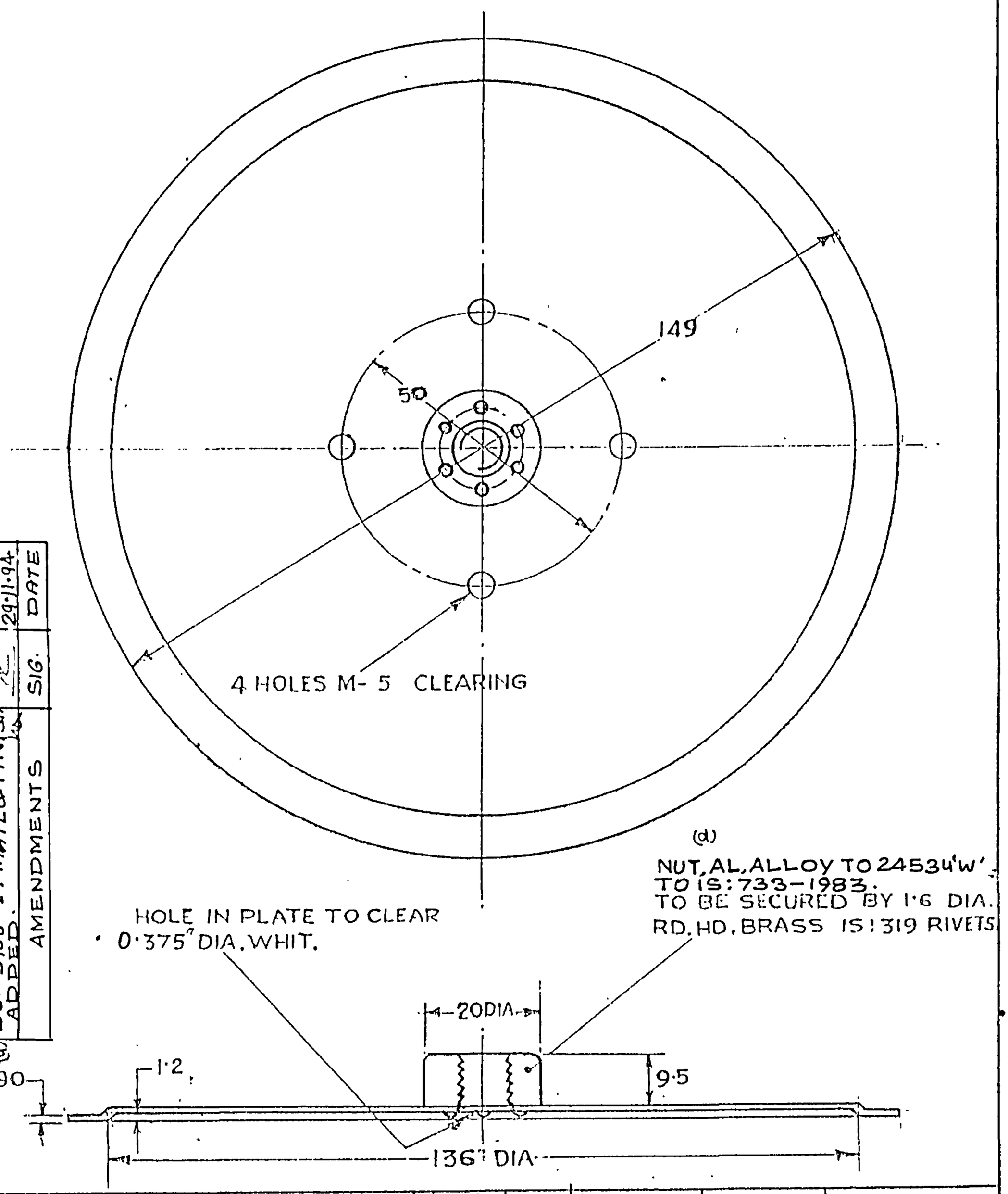

AMENDMENTS	SIG.	DATE
(d) DC:- 5906-I. MATL & FINISH ADDED.		29.11.94

AMENDMENTS	SIG	DATE
D.C:-5741-I:-POLY. NEG. PREPARED & NEW COPY SEALED IN REPLACEMENT OF EXISTING. ONE		12.8.93
(c) D.C(I):-5601-I. MATL. & FINISH AMENDED.		22.10.92
(b) D.C. (I):-5430-I. CAT/PART No. ADDED.		6.11.90
D.C.(I):-3594-I:- DRG. SEALED.		7.7.77
(a) D.C.(I):- 0891-I(P). FINISH. AMENDED.		29.9.75
D.C.(I):-0886-I(P). DRG. PROV. SEALED.		4.12.71.

DRAWN: Hg
TRACED: B.S. Rodi
CHECKED: Nalinshma
APPROVED FOR CHIEF INSP. CII, DEHRADUN
SCALE:- 1/1
DATE:- 27.11.71
DRAWING No. CII-369/9

(c) MATL:- ALUMINIUM ALLOY SHEET 64430 WP TO IS:737-1986.

(a) FINISH (d) ANODISED AC-5 TO IS:1868-1982 & APPLY PRIMER TO IS:2075-1962 & PAINTED (ISC-290 TO IS:5-1978) TO IS:8983-1978

CAT/PART No. (b) 5340-008908

PLATE

SHT SHT

D.C.(I):-0886-I(P), 0891-I(P), 3594-I, 5430-I, 5601-I, 5741-I, 5906-I

D.C.(I):-0586-I(P),0891-I(P),3594-I,4004-I,5430-I,5601-I,5741-I. 5906-I

4 HOLES M-5 CLEARING FOR 4 M-5 RD.HD BRASS IS 3'9 SCREWS 20 LONG, WITH HEX NUT

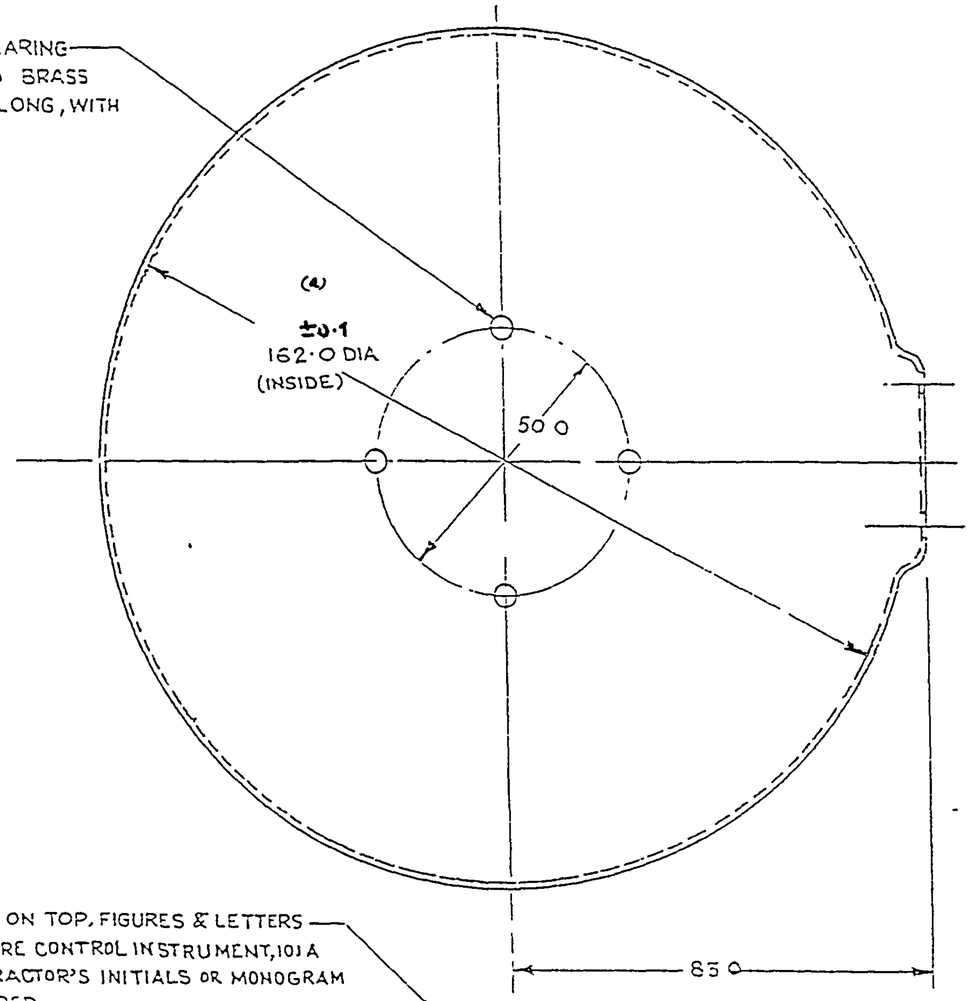

2 HOLES 4.5 DIA

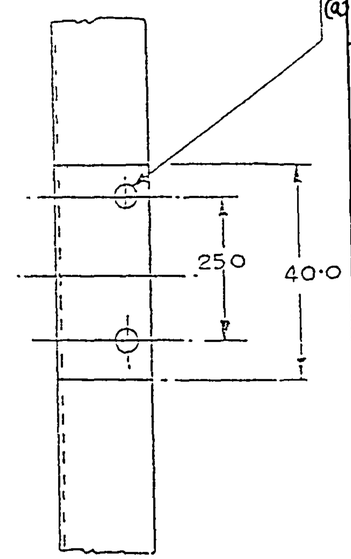

AMENDMENTS	CHD	SIG	DATE
D C:-5741-I:-DRG. REDUCED & NEW COPY SEALED IN SUPERSESSION OF EXISTING ONE.			12 8 93
(a) DC: 5906-I, TOL. & FINISH AMENDED.			29.11.94

- TO BE ENGRAVED ON TOP, FIGURES & LETTERS 3 0 HIGH TRIPOD, FIRE CONTROL INSTRUMENT, 101 A
- CAT/PART No CONTRACTOR'S INITIALS OR MONOGRAM REGISTERED NUMBER.

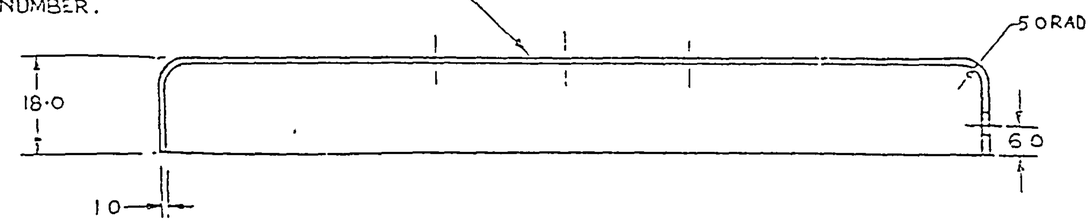

(a)

FINISH:- ANODISED AC-5 TO IS: 1868-1982 & APPLY PRIMER TO IS: 2075-1962 & PAINTED (ISC-294 TO IS: 5-1978) TO IS: 8983-1978

REDUCED DRG. PREPARED AT CQA(I) DEHRA DUN
PREPARED BY : Sunil Kumar
CHECKED BY : [illegible]
DATE: 6.8.93

TITLE

PLATE

FOR EXPLANATION OF DIMENSIONING ETC., SEE CQA(I) GUIDE No 001-1992.
THIRD ANGLE PROJECTION
DIMENSIONS ARE IN mm

DRN	Sd/-	APPROVED
TCD	Sd/-	FOR Sd/- CONTROLLER CQA (I) DDUN
CHD	Sd/-	
CHD	Sd/-	DATE - 27.11.71.

MATL & SPEC:-
ALUMINIUM ALLOY SHEET 64430 WP TO IS:737-1986.

USED ON	
BASED ON	
CAT/PT No	5340-008845
DRG No	CH1-369/10
SCALE 1 :	SH OF

FINISH & SPEC -
AS ON DRG.

FOR EXPLANATION OF DIMENSIONING ETC., SEE CQA(I) GUIDE No.001-1992.
THIRD ANGLE PROJECTION — DIMENSIONS ARE IN mm.

POLYESTER NEGATIVE PREPARED AT CQA(I) D.DUN
PREPARED BY:- sunil nanda
CHECKED BY:- Satish Pokhariyal
DATE:-

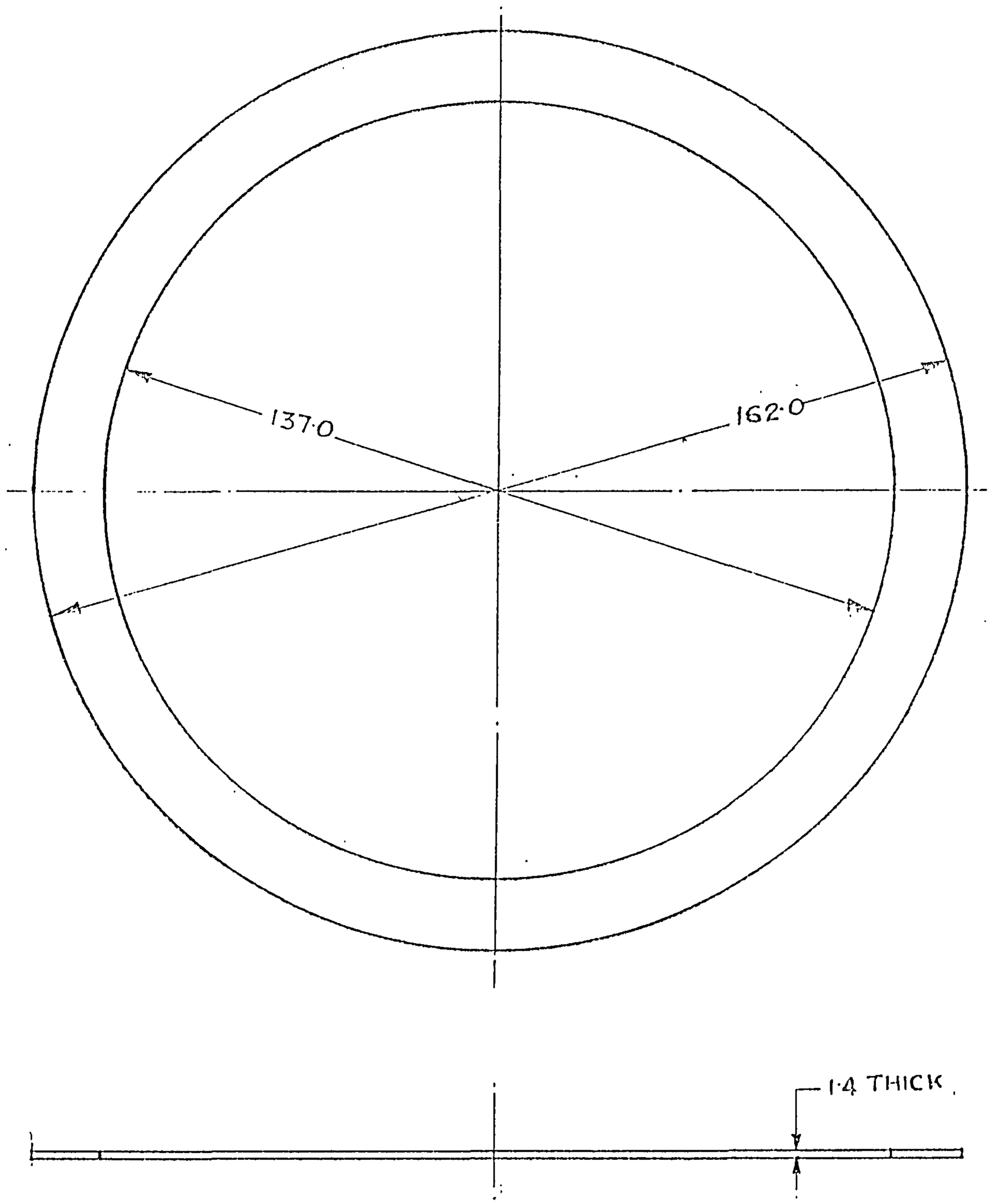

(b) DC:- 5906-I, MATL & FINISH ADDED.		29.11.94	DRAWN	TRACED	APPROVED
D.C:-5741-I:-POLY. NEG. PREPARED & NEW COPY SEALED IN REPLACEMENT OF EXISTING. ONE.		12.8.93			FOR CHIEF INSP. CII, DEHRA DUN
			CHECKED		
(a) D.C. (I):- 5430-I, NOM. AMENDED & CAT/PART No. ADDED.		6.11.90			
D.C. (I):- 3594-I: DRG. SEALED.		7.7.77	SCALE :- 1/1		DATE:-27.11.71
D.C.(I):-0586-I(P). DRG. PROV. SEALED.		4.12.71	DRAWING No. CII-369/11		
AMENDMENTS	SIG	DATE			
MATL.: (b) LETHER COW CURRIED IND/GS/594 OR LETHER, TO IS: 580-1973			CAT/PART No. (a) 5310-014996		
FINISH:- ANTI FUNGUS TREATMENT (b)					
(a) WASHER, FLAT			SHT		SHT

D.C (I):-0586-I (P), 3594-I, 5430-I, 5741-I., 5906-I

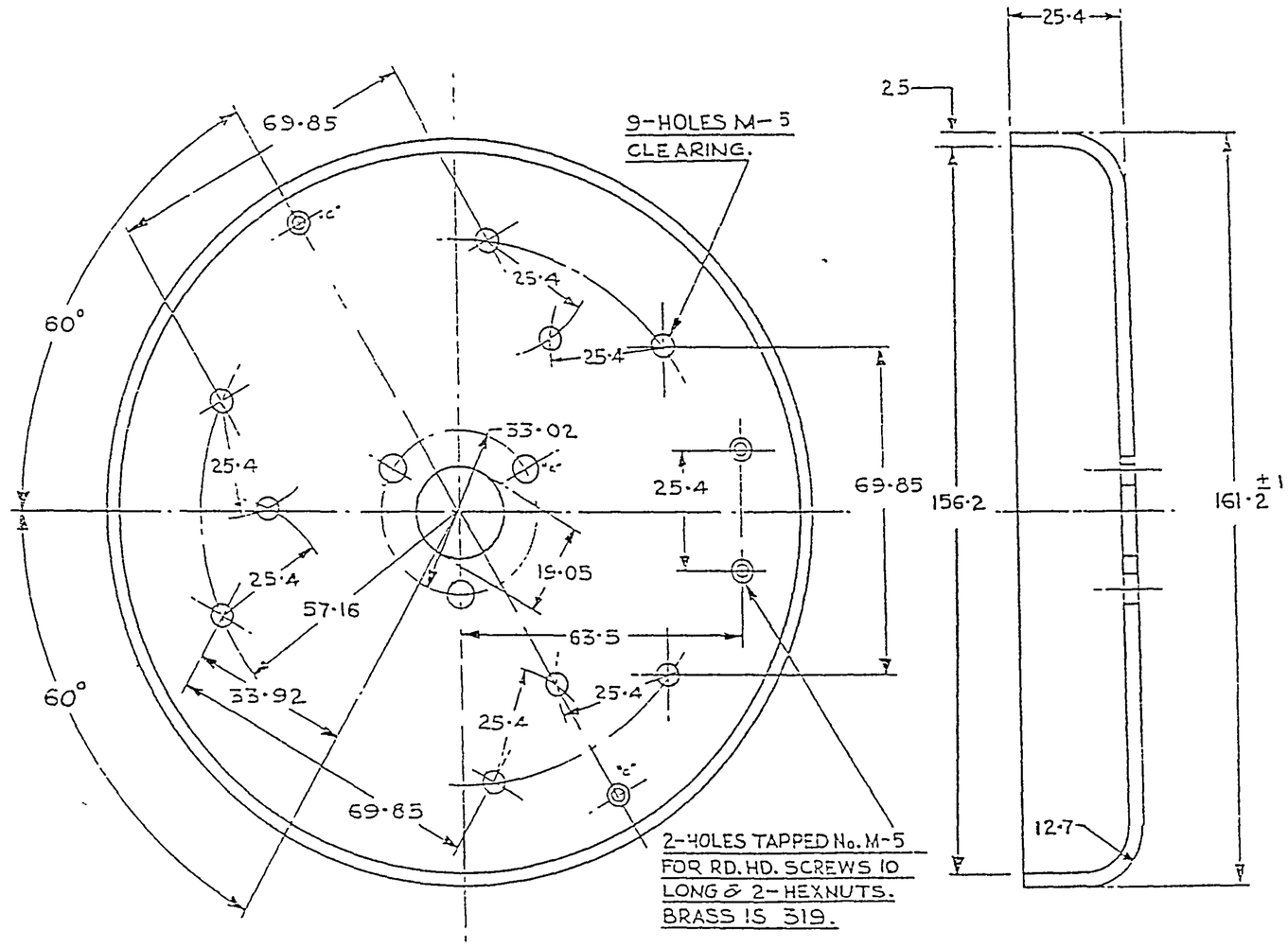

3-HOLES 'a' EQUALLY SPACED M5·0 CLEARING
2-DRAIN HOLES "C" 3·0 DIA. C'SK. INSIDE PCD 140 0

MATL -
ALUMINIUM ALLOY SHEET 64430 WP TO
IS:737-1986

(a)
FINISH:
ANODISED AC-5 TO IS:1868-1982 & APPLY
PRIMER TO IS: 2075-1962 & PAINTED
(ISC-294 TO IS: 5-1978) TO IS:8983-1978.

PLATE, RETAINING

AMENDMENTS	CHD	SIG	DATE
(a) DC:- 5906-I & FINISH ADDED.-			29.11.94
D C:-5741-I:-DRG REDUCED & NEW COPY SEALED IN SUPERSESSION OF EXISTING ONE			12 8.93

FOR EXPLANATION OF DIMENSIONING ETC, SEE CQA(I) GUIDE No 001-1992
THIRD ANGLE PROJECTION
DIMENSIONS ARE IN mm

MATL & SPEC:-
AS ON DRG

FINISH & SPEC:-
AS ON DRG.

DRN	Sd/-	APPROVED
TCD	Sd/-	FOR Sd/- CONTROLLER CQA (I) D DUN
CHD	Sd/-	
CHD	Sd/-	DATE - 27.11.71.
USED ON		
BASED ON	:	
CAT/PT No	5340 008909	
DRG No.	CII -369/12	
SCALE	1 :	S- OF

REDUCED DRG: D.C.(I):-0506-I(P),0891-1(P),3594-I,3951-I,5430-I,5601-I,5741-I, 5906-I
PREPARED BY : SUNIL NANDA
CHECKED BY : [illegible]
DATE 6.8.93

POLYESTER NEGATIVE PREPARED AT CQA(I)D,DUN
PREPARED BY:- sunil nanda
CHECKED BY:- Subir Bikash DATE:- 6.8.93

FOR EXPLANATION OF DIMENSIONING ETC., SEE CQA(I) GUIDE No. 001-1992.
THIRD ANGLE PROJECTION DIMENSIONS ARE IN mm.

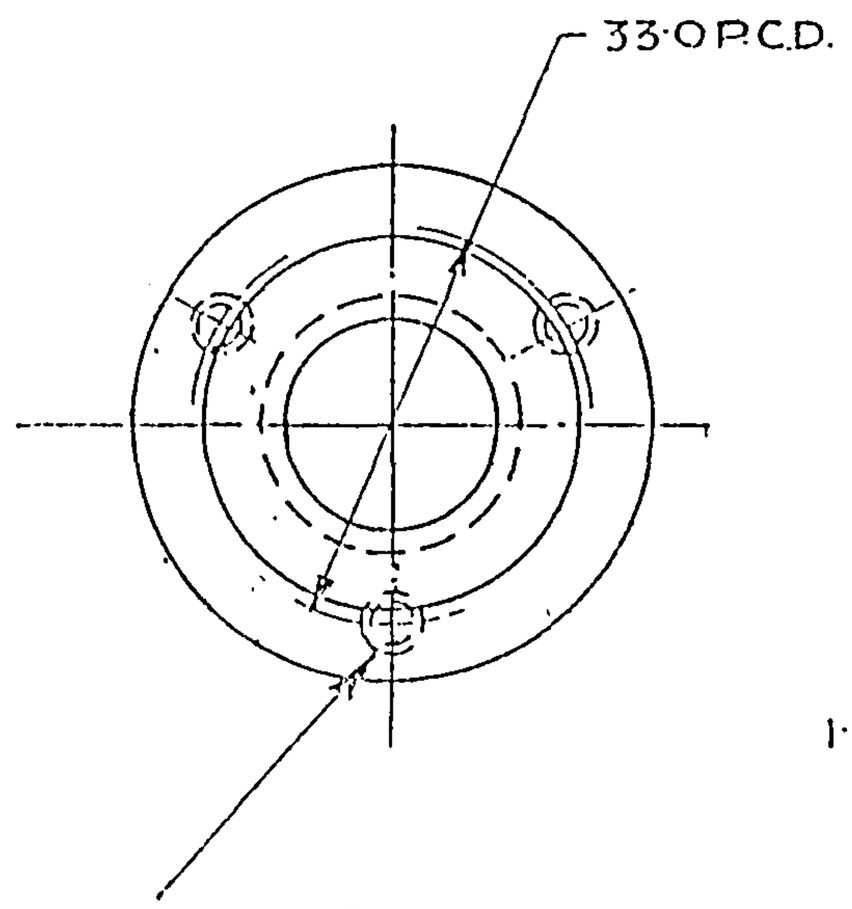

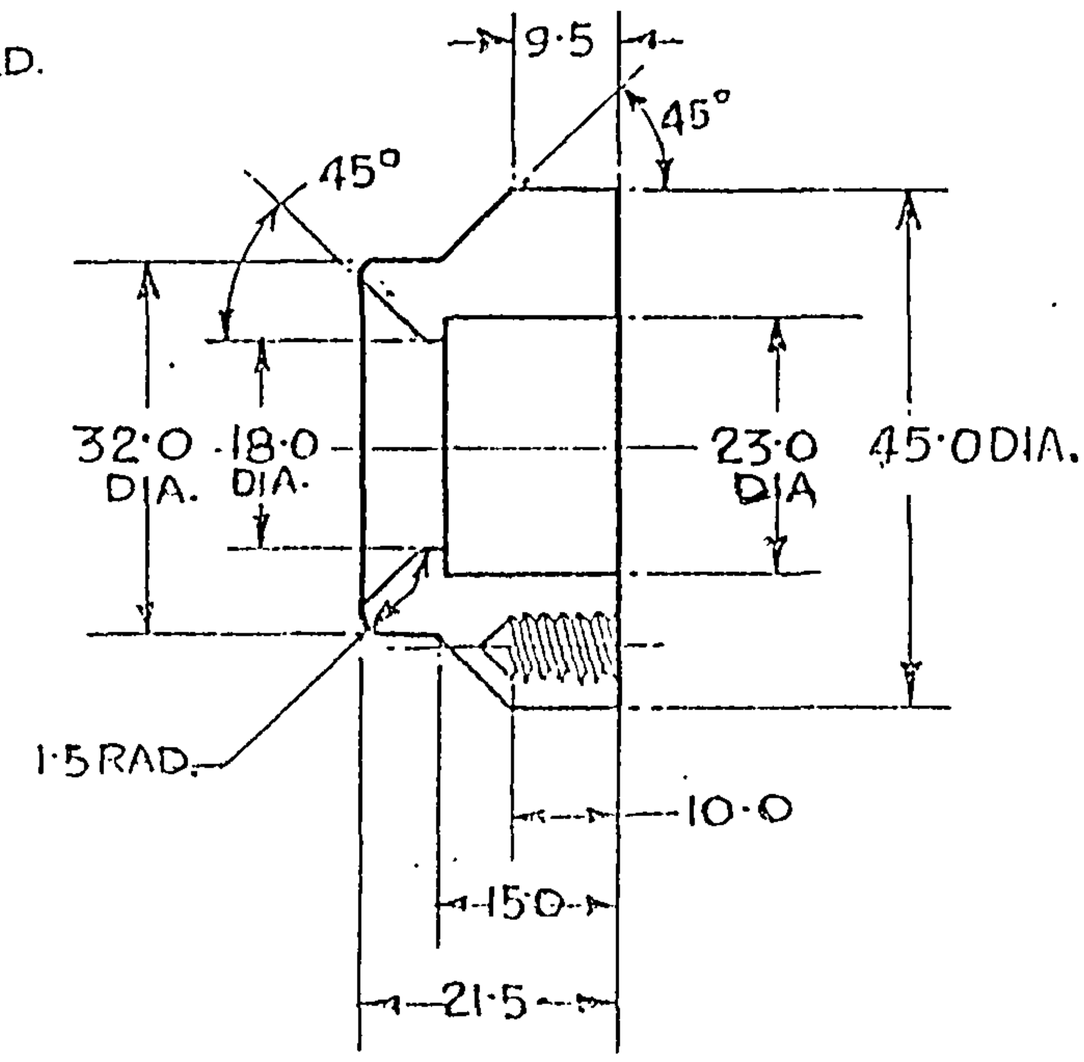

3 HOLES, EQUALLY SPACED
TAPPED M-6 FOR CH. HD. BRASS
IS: 319 SCREWS 18·0 LONG

(c) MATL:- AL. ALLOY. 24534W TO IS: 733-1983

(c) FINISH:- TO BE ANODISED AC-5 TO IS: 1868-1982 THEN APPLY PRIMER TO IS: 2075-1962 & PAINTED (ISC-294 TO IS: 5:- 1978) TO IS: 8983-1978 EXCEPT BEARING SURFACES.

AMENDMENTS	SIG	DATE
(c) DC:- 5906-I, MATL & FINISH AMENDED.		29.11.94
D.C:-5741-I:-POLY. NEG. PREPARED & NEW COPY SEALED IN REPLACEMENT OF EXISTING ONE.		12.8.93
(b) D.C.(I):- 5430-I. NOM. AMENDED & CAT/PART No. ADDED.		6.11.90
D.C.(I):-3594-I:- DRG. SEALED.		7.7.77
(a) D.C.(I):-0891-I(P). FINISH AMENDED.		29.9.75
D.C.(I):-0586-I(P). DRG. PROV. SEALED.		4.12.71.

MATL:- AS ABOVE.

(a) FINISH:- AS ABOVE

(b) RING, RETAINING

DRAWN	TRACED	APPROVED
	B.S. Rach	FOR CHIEF INSPECTOR CII, DEHRADUN
CHECKED		
		DATE:- 27.11.71
SCALE:- 1/1		

DRAWING No.
CII - 369/13

(b) CAT/PART No.
5365-005917

D.C.(I):-0586-I(P), 3594-I, 5430-I, 5741-I, 5906-I

FOR EXPLANATION OF DIMENSIONING ETC., SEE CQA(I) GUIDE No. 001-1992.

THIRD ANGLE PROJECTION. DIMENSIONS ARE IN mm.

POLYESTER NEGATIVE PREPARED AT CQA(I)D, DUN
PREPARED BY:- sunil nanda
CHECKED BY:- Sabhikar, DATE:- 6.8.93

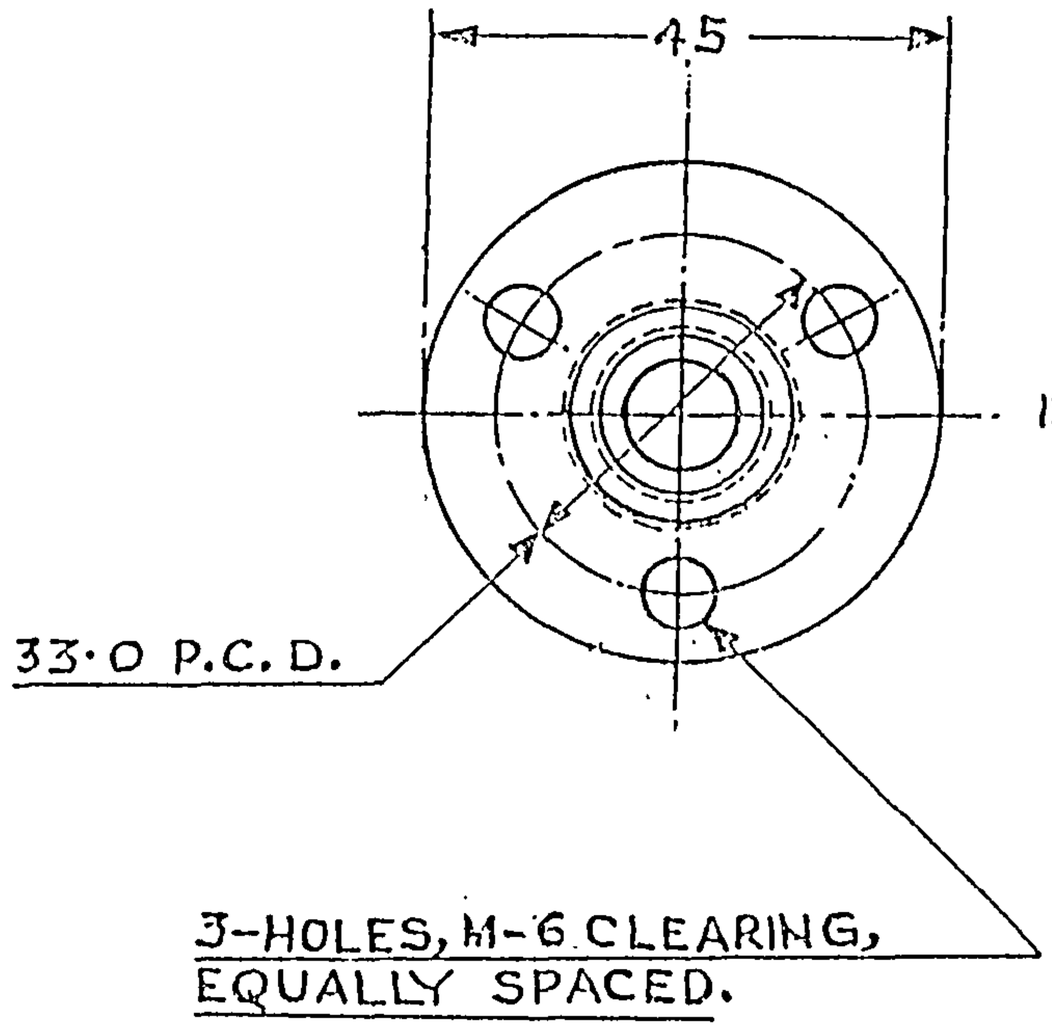

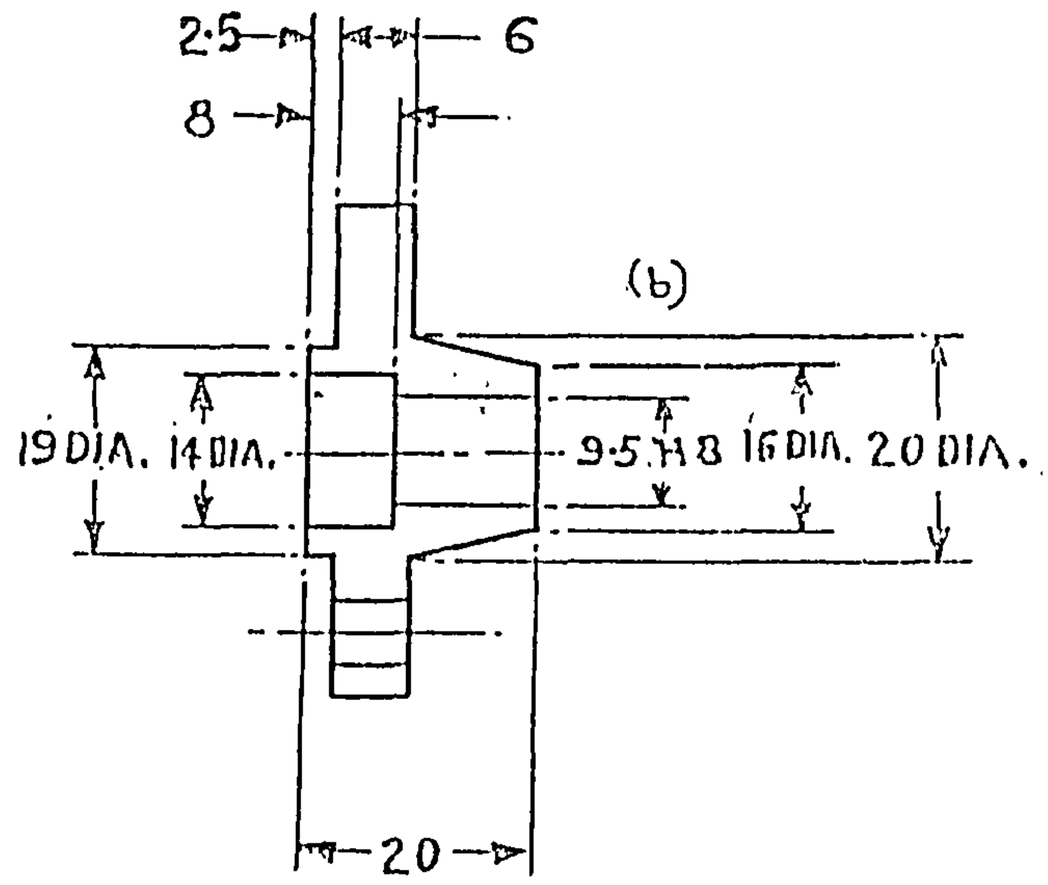

(d)
MATL: AL. ALLOY, 24534W TO IS:733-1983.

(d)
FINISH: TO BE ANODISED AC-5 TO IS:1868-1982 AND APPLY PRIMER IS:2075-1962 & PAINTED (ISC-294 TO IS:5-1978) TO IS:8983-1978, EXCEPT BEARING SURFACES.

(d) DC:- 5906-I, MATL & FINISH AMENDED.		29.11.94	
D.C:- 5741-I:- POLY. NEG. PREPARED & NEW COPY SEALED IN REPLACEMENT OF EXISTING ONE.		12.8.93	
(c) D.C.(I):- 5480-I. CAT/PART No. ADDED.		6.11.90	
(b) D.C.(I):- 3951-I:- DIM. 9·5 HB WAS 9·5 DIA.		12.6.79	
D.C.(I) T-3594-I:- DRG. SEALED.		7.7.77	
(a) D.C.(I):- 0891-I(P). FINISH AMENDED.		29.9.75	
D.C.(I):- 0586-I(P). DRG. PROV. SEALED.		4.12.71.	
AMENDMENTS.	SIG.	DATE	

DRAWN	TRACED	APPROVED FOR CHIEF INSPECTOR CII DEHRA DUN.
CHECKED		
SCALE:- 1/1.	DATE:- 27.11.71	

DRG. No. C.I.I-369/14

CAT/PT. No. (c) 5325-000569

MATL:- AS ABOVE.

(a) FINISH:- AS ABOVE.

SOCKET

D.C.(I):- 0586-I(P), 3594-I, 3951-I, 5430-I, 5741-I. 5906-I

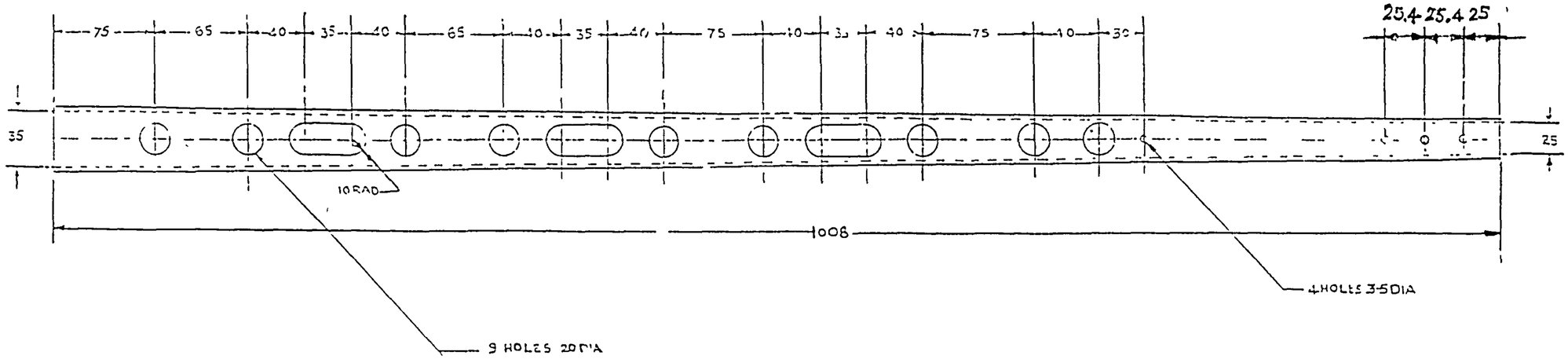

(a)

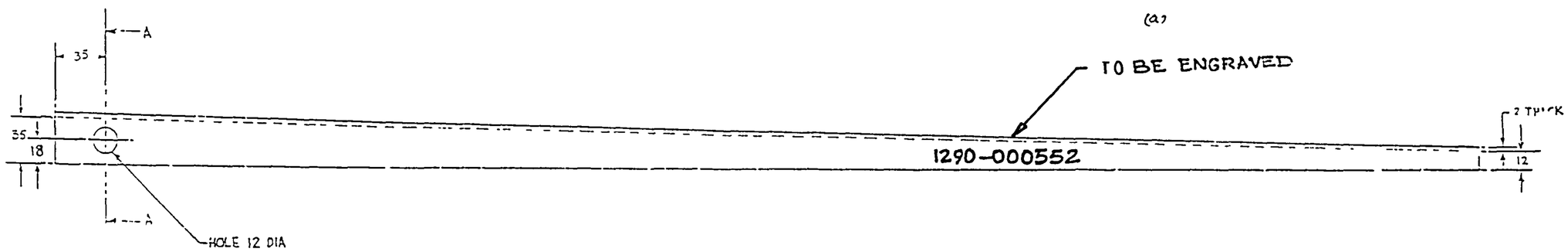

(a)

FINISH.

ANODISED AC-5 TO IS:1868-1982
& APPLY PRIMER TO IS:2075-1962
AND PAINTED (ISC-294 TO IS:5-1978)
TO IS: 8983-1978

D.C.(I):-0586-I(P),0891-I(P),3594 I,540-I.5601-I,5741-I. 5906-J

REDUCED DRG. PREPARED AT CQA( ) DEHRA DUN
PREPARED BY : SUNIL NANDA DATE: 6.8.93
CHECKED BY : [illegible]

(a) DC:- 5906-J, FINISH & CAT/PT. No. AMENDED. — 29.11.94

D C:-5741-I -DRG. REDUCED & NEW COPY SEALED IN SUPERSESSION OF EXISTING ONE — 12.8.93

AMENDMENTS	CHD	CIG	DATE

LEG

FOR EXPLANATION OF DIMENSIONING ETC., SEE CQA(I) GUIDE No 001-1992.
THIRD ANGLE PROJECTION
DIMENSIONS ARE IN mm

MATL & SPEC:-
ALUMINIUM ALLOY SHEET
64430 WP, TO IS:737 1986

FINISH & SPEC:-
AS ABOVE

DRN	Sd/-	APPROVED
TCD	Sd/-	FOR Sd/- CONTROLLER CQA (I) DDUN
CHD	Sd/-	
CHD	Sd/-	DATE -27.11.71
USED ON		
BASED ON		
CAT/PT No.	1290-000552	
DRG No.	C11-369/15	
SCALE	: 1	SH OF

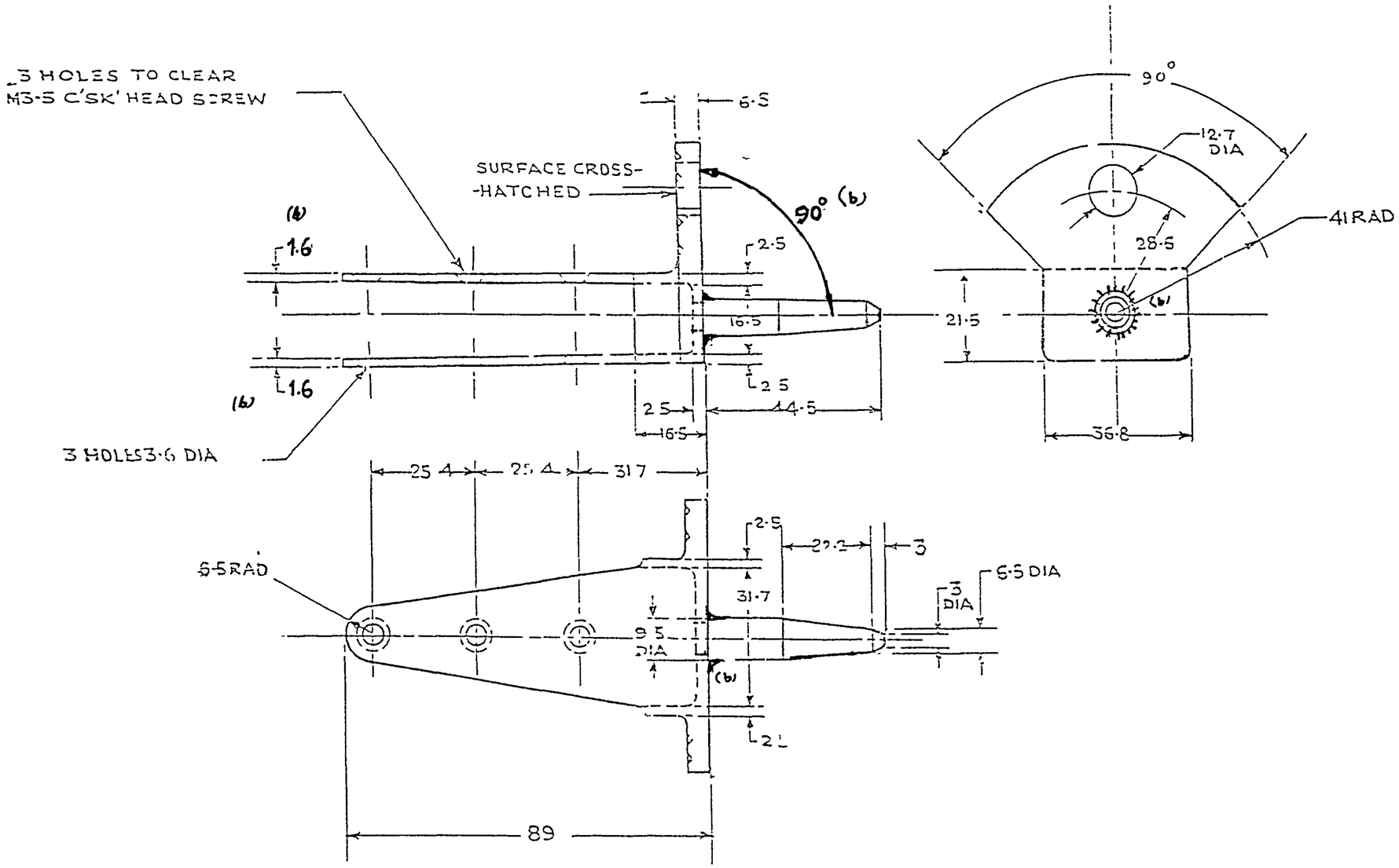

NOTE:-(b)
SHOE TO BE FABRICATED BY WELDING.

AMENDMENTS	CHD	SIG	DATE
(b) D.C:- 5963-I, MATL. AMENDED & NOTE ADDED			8.5.95
(a) DC:-5906-I, MATL & FINISH AMENDED.			29.11.94
D C:-5741-I.-DRG REDUCED & NEW COPY SEALED IN SUPERSESSION OF EXISTING ONE.			12 8 93

SHOE

FOR EXPLANATION OF DIMENSIONING ETC., SEE CQA(I) GUIDE No 001-1992.
THIRD ANGLE PROJECTION
DIMENSIONS ARE IN mm

MATL & SPEC:-
(b) STRUCTURAL STEEL (FUSION WELDING QUALITY) TO IS:2062-1992 & COLD ROLLED LOW CARBON STEEL SHEET/STRIP TO IS:-513-1986

FINISH & SPEC. (a)
TO BE PHOSPHATED CLASS 'B' TO IS: 3618-1966 APPLY PRIMER IS: 2074-1962 & PAINTED (ISC-294 OF IS: 5:-1978) TO 8483-1978

DRN	sd/	APPROVED sd/- FOR CONTROLLER CQA (I) GOUN
TCD	sd/-	
CHD	sd/-	
CHD	sd/-	DATE:- 27.11.71.
USED ON		
BASED ON		
CA/PT No	1290-000551	
DRG No	C 11-369/16	
SCALE		SH OF

REDUCED DRG. PREPARED AT CQA(I) GOUN
PREPARED BY : SUNIL NANDA
CHECKED BY : Shankar
DATE: 6.8.93

D C.(I):-0586-I(P),0891-I(P),3594-I,5430-I,5741-I. 5906-I, 5963-I,

POLYESTER NEGATIVE PREPARED AT CQA(I) D.DUN
PREPARED BY:- sunil nanda
CHECKED BY:- DATE:-

FOR EXPLANATION OF DIMENSIONING ETC., SEE CQA(I) GUIDE No. 001-1992.
THIRD ANGLE PROJECTION — DIMENSIONS ARE IN m.m.

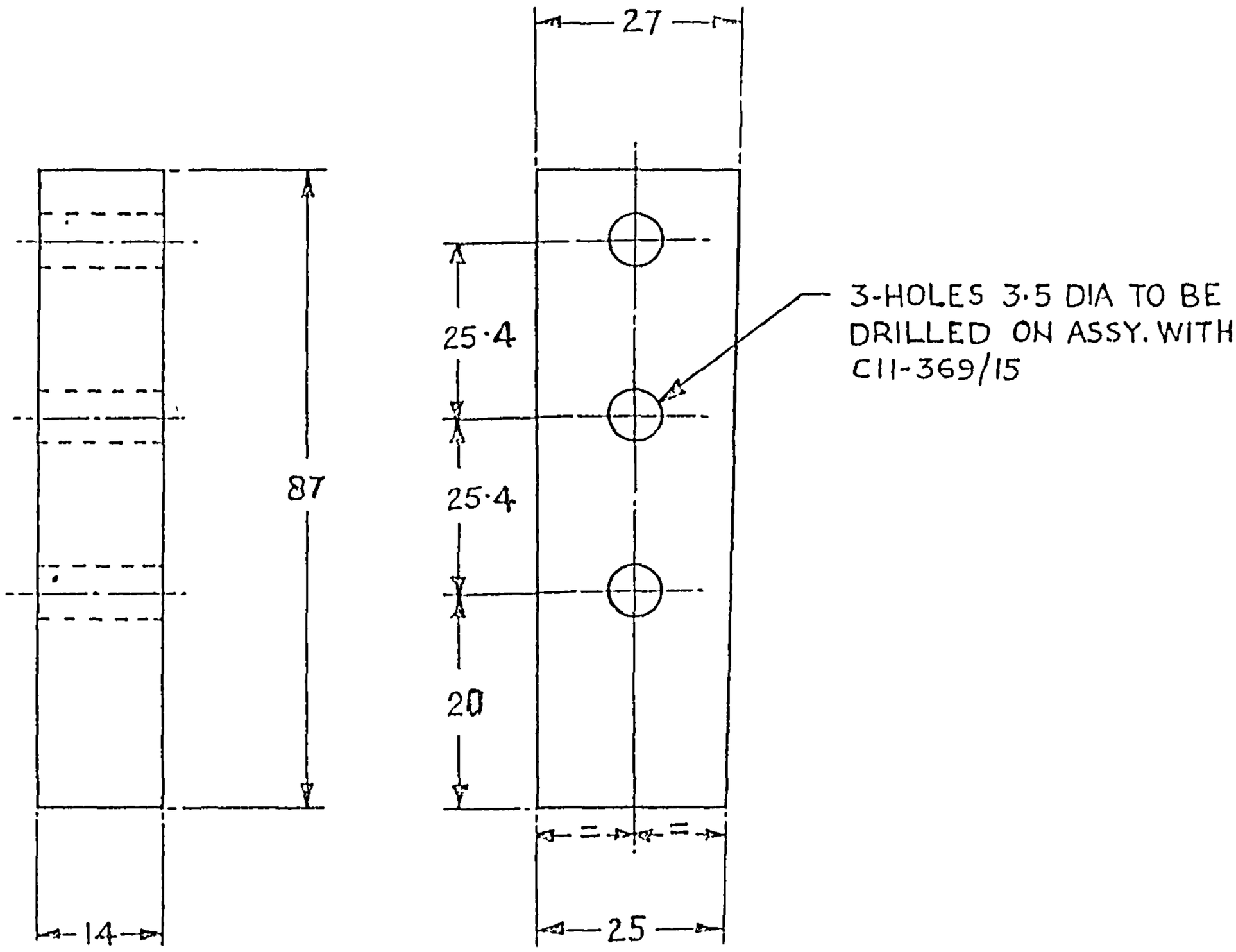

(c) DC:- 5906-I, MATL & FINISH AMENDED.		29.11.94	
DC:-5741-I:-POLY. NEG. PREPARED & NEW COPY SEALED IN REPLACEMENT OF EXISTING ONE.		12.8.93	
(b) D.C.(I):-5430-I. NOM. AMENDED & CAT/PART No. ADDED.		6.11.90	
D.C.(I):-3594-I:- DRG. SEALED		7.7.77	
(a) D.C.(I):-0891-I(P). FINISH AMENDED		29.9.75	
D.C.(I):-0586-I(P) DRG PROV SEALED.		4.12.71.	
AMENDMENTS	SIG.	DATE	

DRAWN — TRACED — APPROVED

CHECKED

FOR CHIEF INSPECTOR CII, DEHRADUN

SCALE :- 1/1

DATE :- 27.11.71

DRAWING No. C11-369/17

CAT/PART No. (b) 5330-012410

(c) MATL. :- WOOD SISOO/DEODAR SEASONED

(c) FINISH :- APPLY PRIMER TO IS: 2074-1962. PAINTED (SC-294 TO IS:5-1978) TO IS: 8982-1978

(b) PACKING, MATERIAL

SHTS. SHT.

D C11-0586-I (P), 0891-I(P), 3594-I, 5430-I, 5741-I, 5906-I

	CAT/PART No	NOMENCLATURE SCHEDULE FOR PART COMPRISING	No. PER	DRAWING No.
(a)	1290-000252	TRIPOD, FIRE CONTROL INSTRUMENT, 101A		C11-369
	5340-008843	BOLT ASSEMBLY, CLAMP	3	C11-369/SA1.
	1290-000550	COVER	1	C11-369/SA2
	1290-000549	HEAD CARRIER	1	C11-369/SA3
(c)	3950-000142	HOUSING UNIT, TRIPOD	3	C11-369/SA4
(b)	5120-004752	CLAMP, SCREW ADJUSTABLE	1	C11-643
	5340-008838	BRACKET, HINGE	3	C11-369/1
		MACHINE SCREW, RD. HD, M5 X 10 BRASS	9	
	5340-008907	STRAP	1	C11-369/2
		MACHINE SCREW, RD. HD, M-4X12-BRASS	1	
		NUT, HEX, M-4-BRASS.	1	
		MACHINED WASHER, M4, IS: 2016-BRASS	1	
	5365-005916	SPACER, SLEEVE	1	C11-369/3

POLYESTER NEGATIVE PREPARED AT CQA(I) D.DUN
PREPARED BY:- SUNIL NANDA
CHECKED BY:- [signature]
DATE:- 6.8.93

D.C.(I):-0536-I(P), 0891-I(P), 3594-I, 4672-I; 5430-I, 5741-I.

98

			PREPARED	TRACED	CHECKED	APPROVED
D.C:- 5741-I:- POLY. NEG. PREPARED & NEW SEALED IN REPLACEMENT OF EXISTING ONE		12.8.93	[signature]	B.S. Badi	[signature]	FOR CHIEF INSP. C11 DEHRADUN
(C) D.C.(I):- 5430-I. NOMS. AMENDED & CAT/PT. Nos. ADDED		6.11.90	SCHEDULE FOR DRG. No C11-369			
(b) D.C(I):- 4672-I. C11-643 WAS C11-369/SA-5		5.84.				
D.C.(I):- 3594-I:- SCH. SEALED.		7.7.77				
(a) D.C.(I):- 0891-I(P). NOM. AMENDED & CAT/PT. No. ADDED.		29.9.75	SCHEDULE FOR CAT/PART No 1290-000252			(a)
D.C.(I):- 0536-I(P). SCH. PROV. SEALED.		4.12.71.				
AMENDMENTS	SIG	DATE	-SHTS-			SHT-

COPY

(5D) FOR EXPLANATION OF DIMENSIONING ETC., SEE CII TECH. INSTRUCTIONS No. 01
THIRD ANGLE PROJECTION — DIMENSIONS ARE IN mm

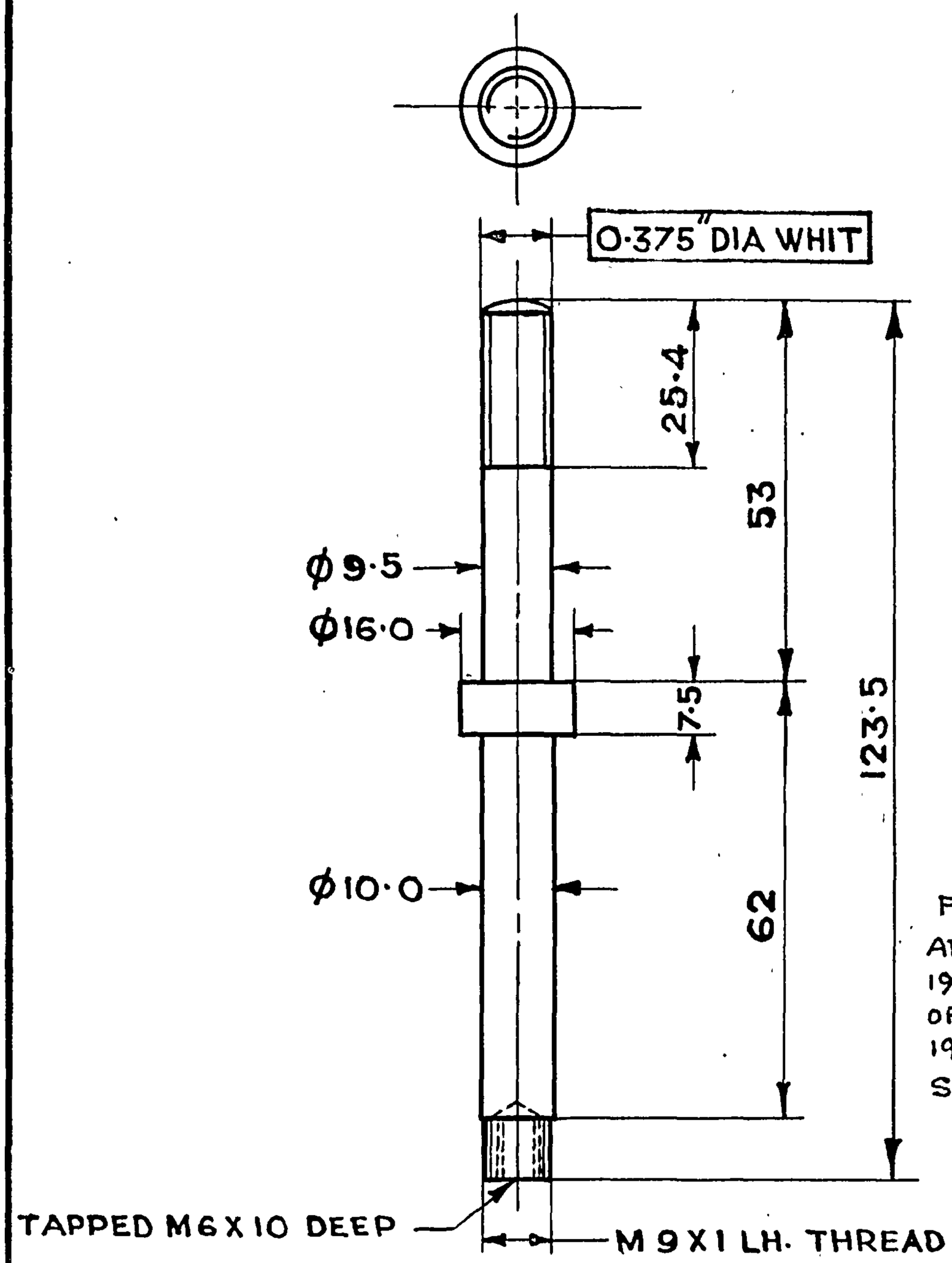

(b)
FINISH:-
APPLY PRIMER IS:2075-1962 & PAINTED (ISC-294 OF IS: 5-1978) TO IS:8983-1978 EXCEPT BEARING SURFACES.

D.C(I):-4672-I, 5430-I, 5906-I

SYMB	AMENDMENTS	CHD	SIG	DATE
	(b) DC:- 5906-I, MATL & FINISH AMENDED			29.11.94
	(a) D.C. (I):-5430-I. NOM. AMENDED & CAT/PART No. ADDED.			6.11.90
	D.C(I):-4672-I. DRG. SEALED.			1.3.84

DRN		APPROVED FOR CONTROLLER CII, D. DUN	
TCD			
CHD			
CHD		DATE:-22-12-83	
USED ON	CII-643		
BASED ON			
CAT/PT No.	(a) 5340-008840		
DRG No.	CII-643/1		
SCALE	1:1	SH	OF

MATL & SPEC	BRASS Gde 2, HB TO IS: 319-1989 (b)
FINISH & SPEC	~~TOOL STEEL, ENAMELLED & PAINTED WITH STANDARD COLOUR 220 OG TO SPEC IS:150 OR IS:101 EXCEPT BEARING SURFACES~~ AS ABOVE
TITLE:-	HOOK, SCREW (a)

(5D) FOR EXPLANATION OF DIMENSIONING ETC., SEE CII TECH. INSTRUCTIONS No.01
THIRD ANGLE PROJECTION — DIMENSIONS ARE IN mm

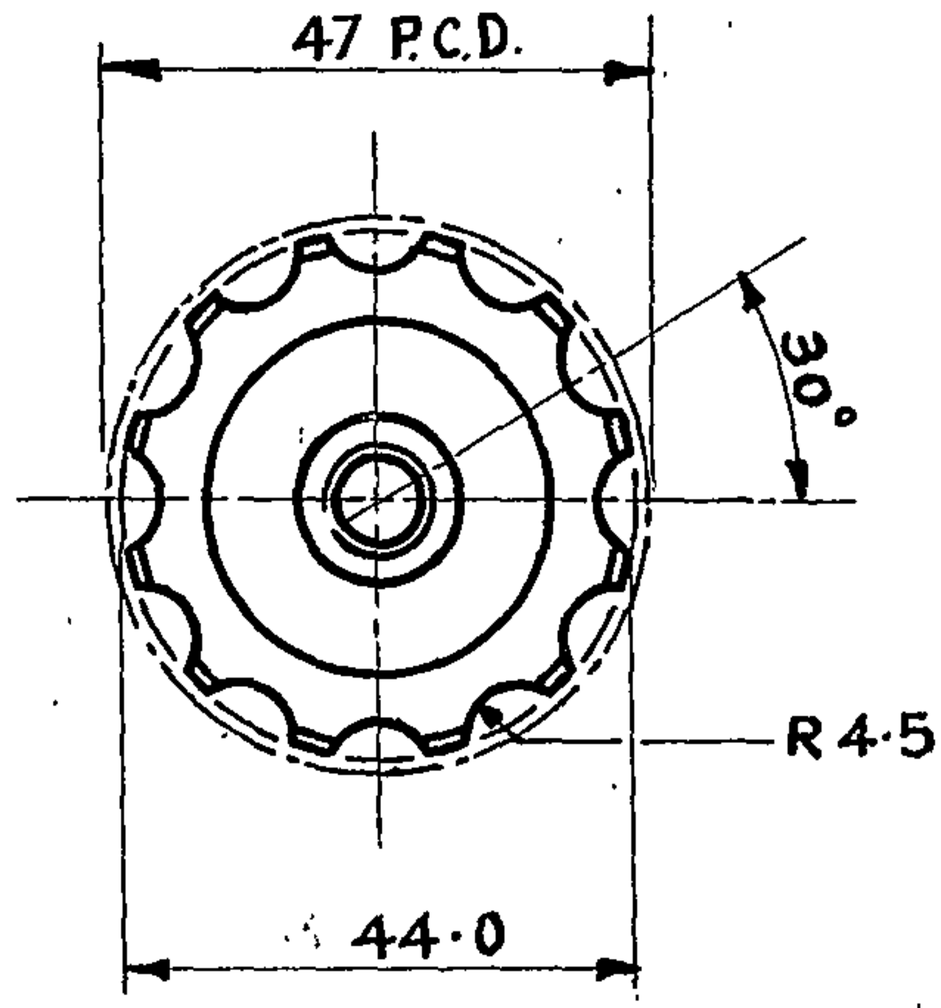

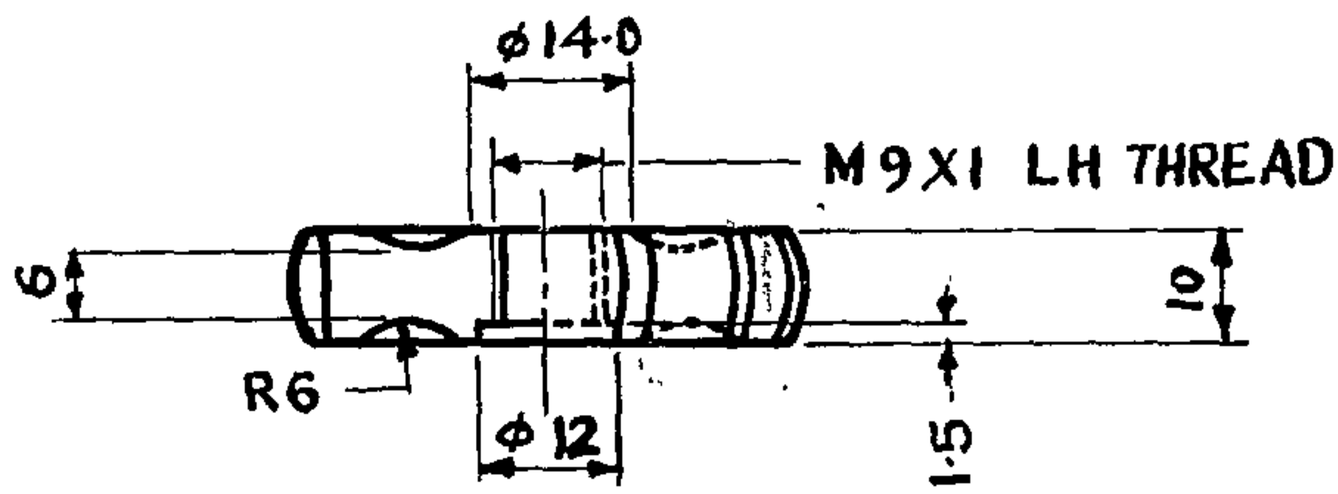

(a)

FINISH: APPLY PRIMER IS:2075-1962 & PAINTED (ISC-294 OF IS: 5-1978). ~~IS:5-1978~~ TO IS:8983-1978 EXCEPT BEARING SURFACES.

SYMB	AMENDMENTS	CHD	SIG	DATE
(b)	D.C.7014-I. CAT/PART. No. ADDED.			20.9.09
(a)	DC:- 5906-I, MATL & FINISH AMENDED.			29.11.94
	D.C(I):-4672-I, DRG. SEALED.			1.3.84

DRN	
TCD	
CHD	
CHD	
USED ON	CII-643
BASED ON	[illegible]
CAT/PT No.	V6/5355-016773 (b)
DRG No.	CII-643/2
SCALE	1:1 SH OF

APPROVED FOR CONTROLLER CII, D. DUN
DATE:-22-12-83

MATL & SPEC: BRASS Gde-2, HB TO IS: 319-1989. (a)

FINISH & SPEC: ~~TO BE STOVE ENAMELLED & PAINTED WITH STANDARD COLOUR 220 OG TO SPEC IS:150 OR IS:101 EXCEPT BEARING SURFACES.~~ AS ABOVE

TITLE:- KNOB

D.C(I):-4672-I; 5906-I, 7014-I.

(5D)

FOR EXPLANATION OF DIMENSIONING ETC., SEE CII TECH. INSTRUCTIONS No. 01
THIRD ANGLE PROJECTION — DIMENSIONS ARE IN mm

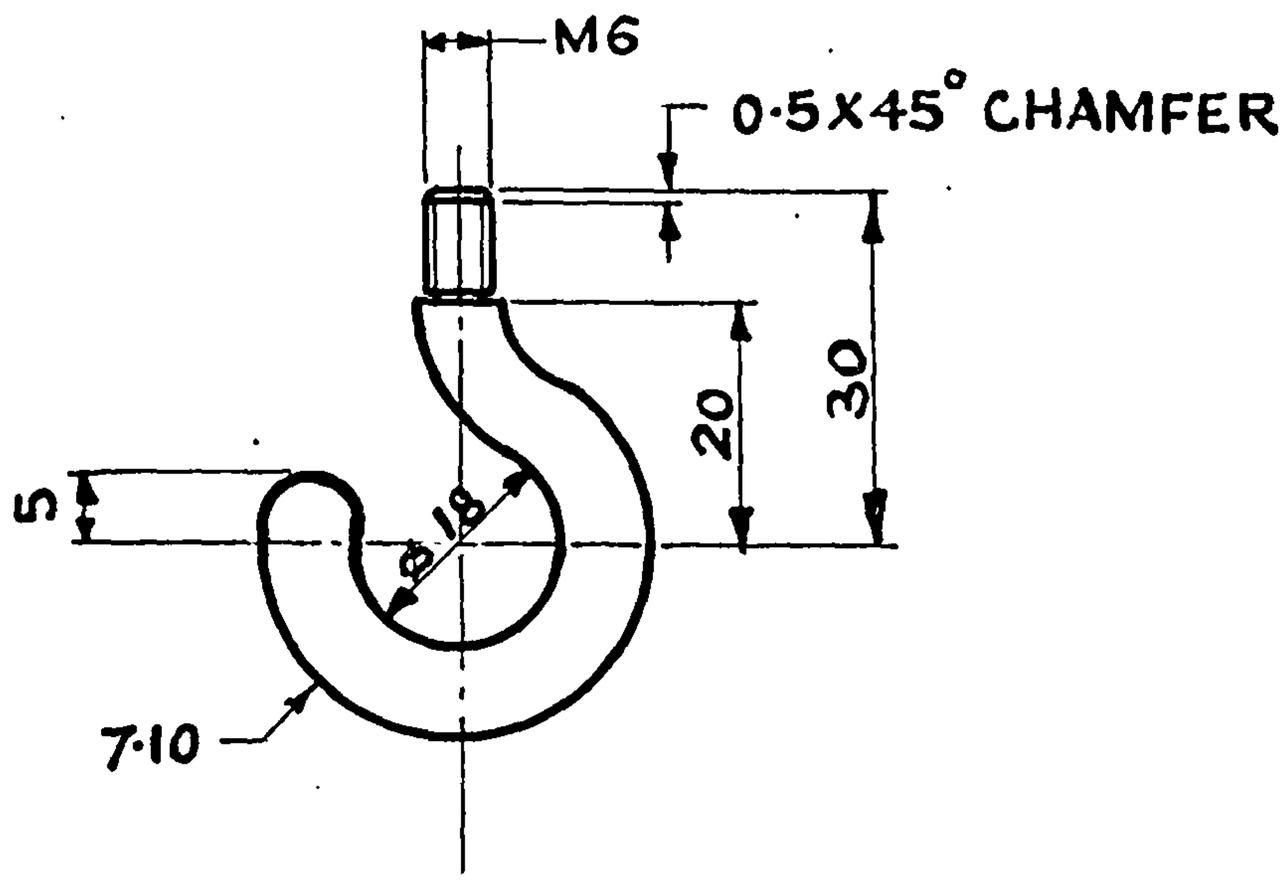

D.C(I):- 4672-I, 5430-I, 5906

SYMB	AMENDMENTS	CHD	SIG	DATE
(b)	DC:- 5906-I, MATL & FINISH AMENDED			29.11.94
	(a) D.C.(I):-5430-I. NOM. AMENDED & CAT/PART No. ADDED.			6.11.90
	D.C(I):- 4672-I. DRG. SEALED.			1.3.84

DRN		APPROVED FOR CONTROLLER CII, D. DUN
TCD		
CHD		
CHD		DATE:- 22-12-83
USED ON	CII-643	
BASED ON		
CAT/PT No.	5340-008841 (a)	
DRG No.	CII-643/3	
SCALE	1:1	SH OF

MATL & SPEC	BRASS, Gde-2, HB(T.O.) IS:- 319-1989 (b)
FINISH & SPEC	DULL NICKEL PLATED, C Ni 30 P CTT TO IS: 4827-1968. (b)
(a) TITLE:-	HOOK, SUPPORT

(5D) FOR EXPLANATION OF DIMENSIONING ETC., SEE CII TECH. INSTRUCTIONS No. 01

THIRD ANGLE PROJECTION — DIMENSIONS ARE IN mm

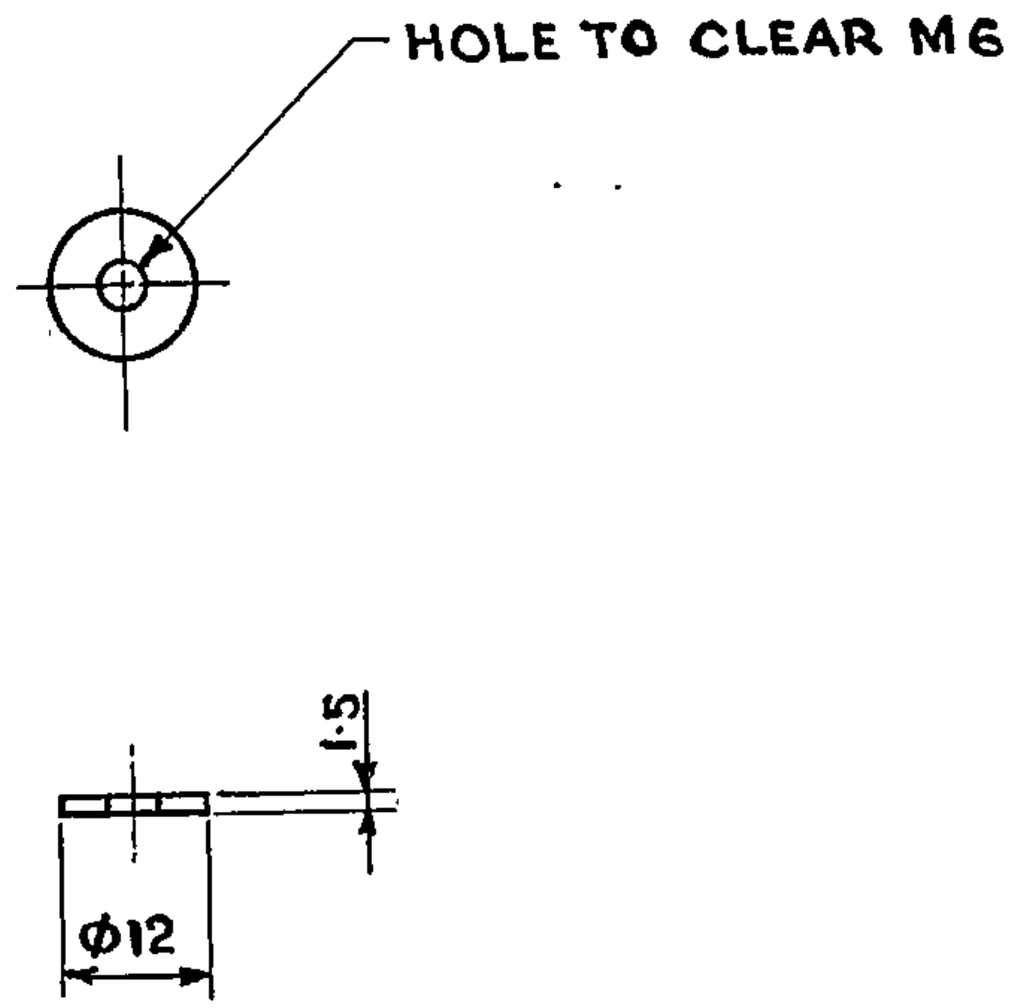

D.C(4)-4672-I, 5906-I, 7014-I.

SYMB	AMENDMENTS	CHD	SIG	DATE
(b)	D.C. [illegible]			
(b)	D.C. 7014-I. NOM. AMENDED AND CAT/PT. No. ADDED.			20.9.09
	(4) DC:- 5906-I, MATL & FINISH AMENDED.			29.11.95
	D.C(1)-4672-I. DRG. SEALED.			1.3.84

DRN		APPROVED FOR CONTROLLER CII, DEHRADUN	
TCD			
CHD			
CHD		DATE:- 22-12-83	
USED ON	CII-643		
BASED ON	CII-643/2		
CAT/PT. No.	VB/5120-423150 (b)		
DRG. No.	CII-643/4		
SCALE	1:1	SH	OF

MATL. & SPEC	BRASS, Gde-2, HB, TO IS: 319-1989
FINISH & SPEC	DULL NICKEL PLATED, CN 30 bc & TO IS: 4827-1968.
TITLE:-	WASHER FLAT

(5D) FOR EXPLANATION OF DIMENSIONING ETC., SEE CII TECH. INSTRUCTIONS No. 01
THIRD ANGLE PROJECTION — DIMENSIONS ARE IN mm

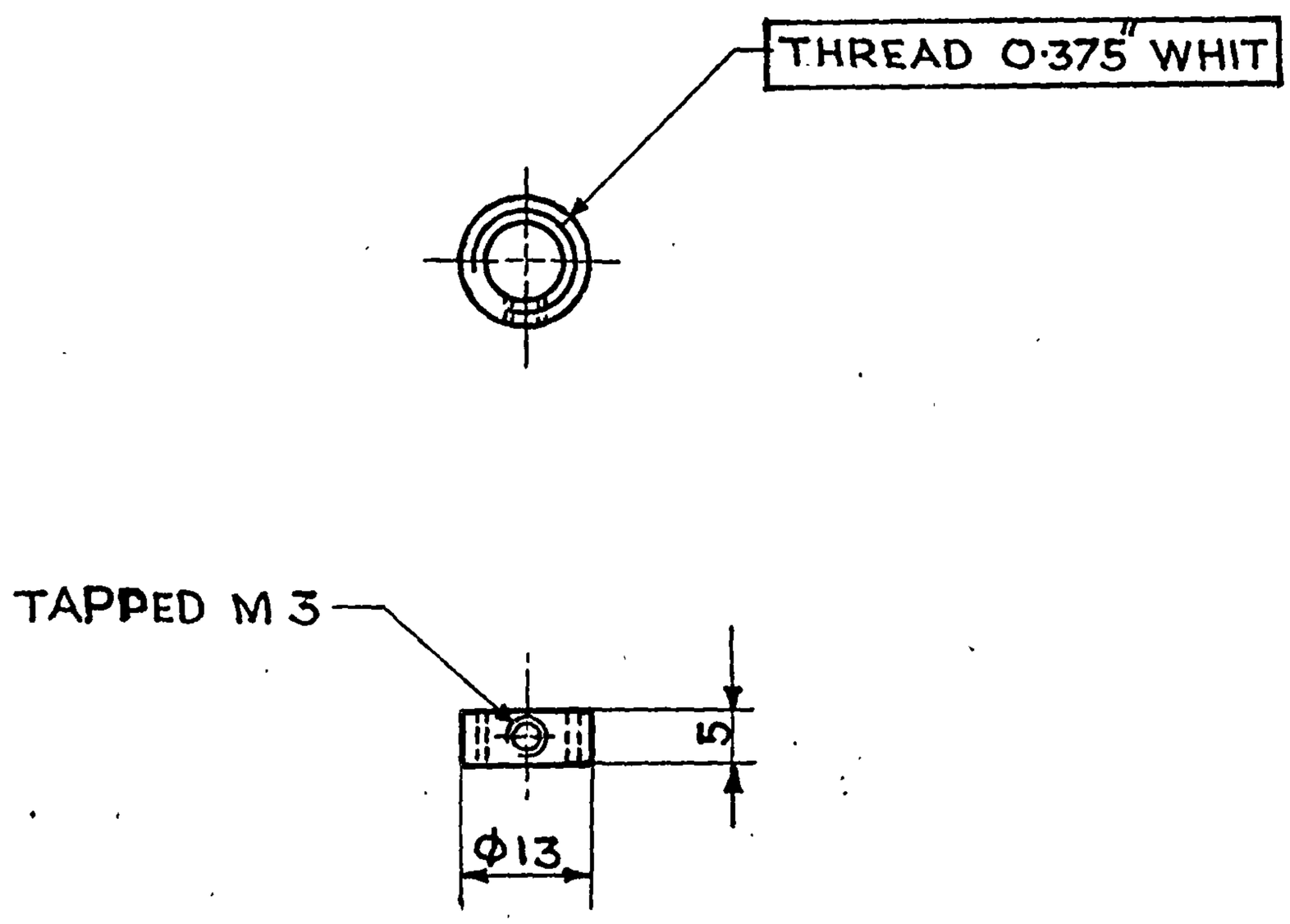

D.C(I):- 4672-I, 5430-I, 5906-I

SYMB	AMENDMENTS	CHD	SIG	DATE
	(b) DC: 5906-I, MATL & FINISH AMENDED.			29.11.95
	(a) D.C. (I):-5430-I. CAT/PART No. ADDED.			6.11.90
	D.C(I):-4672-I DRG. SEALED.			1.3.84

MATL & SPEC	(b) BRASS, Gde-2, HB, TO IS: 319-1989
FINISH & SPEC	DULL NICKEL PLATED, CNi 30 b Crr TO IS: 4827-1968. (b)
TITLE:-	COLLAR

DRN		APPROVED FOR CONTROLLER CII, D. DUN
TCD.		
CHD		
CHD		DATE:-22-12-83
USED ON	CII-643	
BASED ON		
CAT/PT No.	1290-000553 (a)	
DRG No.	CII-643/5	
SCALE	1:1	SH OF

(5D)

FOR EXPLANATION OF DIMENSIONING ETC, SEE CQA(I) GUIDE No. 001-1992-01

THIRD ANGLE PROJECTION

DIMENSIONS ARE IN mm

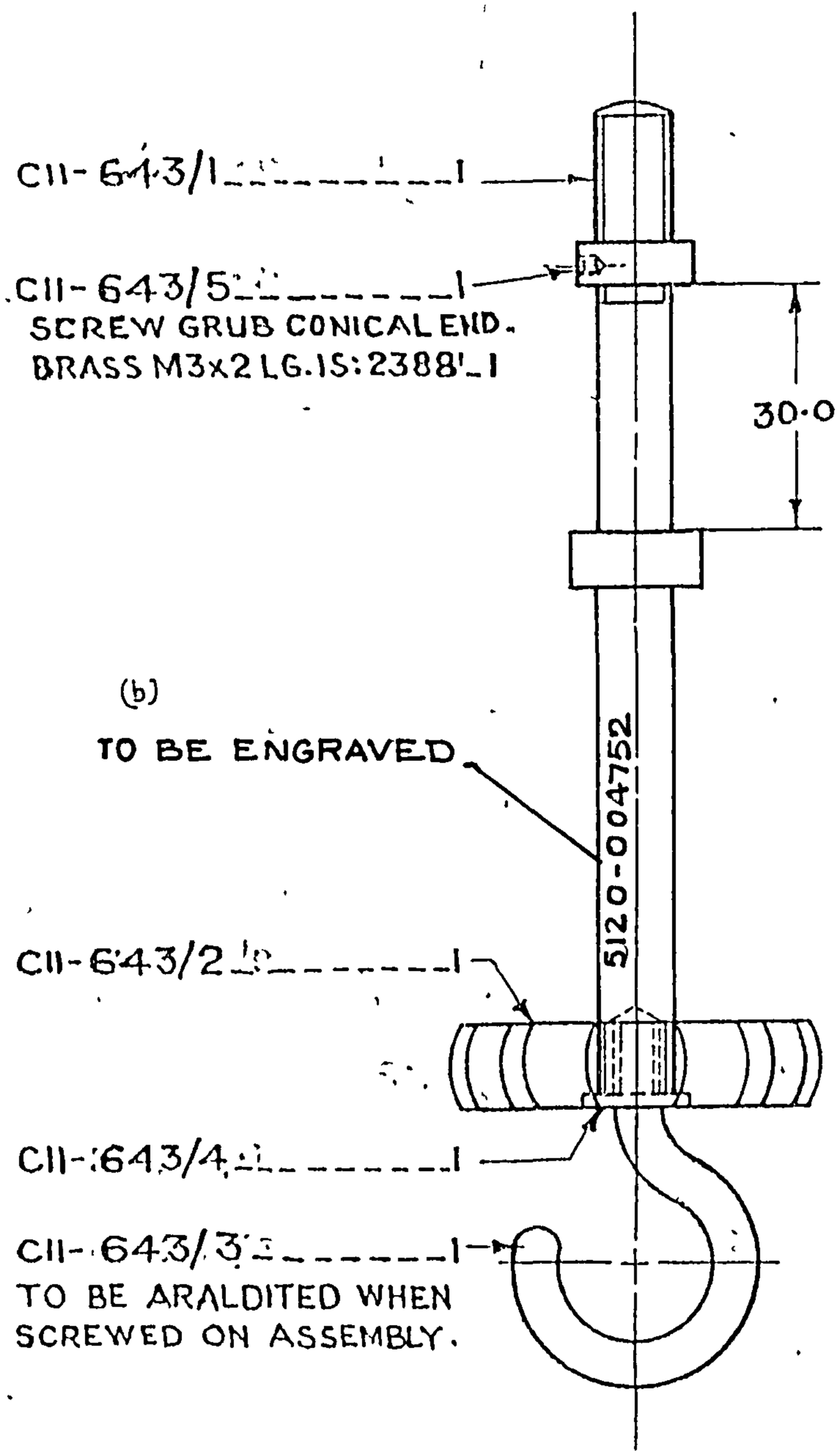

SYMB	AMENDMENTS	CHD	SIG	DATE
(b)	DC:-5906-I, CAT/PT. No. ADDED			29.11.94
	D C-5741-I-POLY NEG PREPARED & NEW COPY SEALED IN REPLACEMENT OF EXISTING ONE.			12 8 93
	(a) D.C.(I):-5430-I. NOM. AMENDED & CAT/PART No. ADDED			6.11.90
	D.C(I):-4672-I. DRG. SEALED.			1.2.84

MATL & SPEC	SEE DETAILS
FINISH & SPEC	SEE DETAILS
TITLE -	CLAMP SCREW, ADJUSTABLE

DRN		APPROVED
TCD		FOR CONTROLLER C11, D. DUN
CHD		
CHD		DATE.-22-12-83
USED ON		
BASED ON		
CAT/PT No	5120-004752 (a)	
DRG. No	C11-643	
SCALE	1:1	SH OF

POLYESTER NEGATIVE PREPARED AT CQA(I) D.DUN D.C(I):-4672-I, 5430-I, 5906-I

PREPARED BY:- sunil nanda

CHECKED BY:- DATE:- 6.8.93

CAT/PART No.	NOMENCLATURE SCHEDULE OF PARTS COMPRISING	No. PER ASSY.	DRAWING No.
	TRIPOD FIRE CONTROL, INSTRUMENT 101 A		
5120-004752	~~SCREW, CLAMPING~~ CLAMP SCREW, ADJUSTABLE	1	~~C11-643~~
5340-008840	HOOK, SCREW	1	C11-643/1
V6/5355-016773	KNOB	1	C11-643/2 (b)
5340-008841	HOOK, SUPPORT	1	C11-643/3
(a) V6/5120-423150	WASHER FLAT	1	C11-643/4 (b)
1290-000553	COLLAR	1	C11-643/5
	SCREW, GRUB, CONICAL END, BRASS, M3X2 LONG IS: 2388	1	
~~5120-004752~~	~~CLAMP, SCREW, ADJUSTABLE~~	1	~~C11-643~~

D.C.(1):-4672-I, 5430-I, 7014-I

(b) D.C. 7014-I. NOM. AMENDED. AND CAT/PT. No. ADDED.		20-9-09	
(a) D.C.(1):-5430-I. NOMS. AMENDED & CAT/PART NOS. ADDED		6.11.90	
D.C.(1):-4672-I. SCH. SEALED.		1.3.84.	
AMENDMENTS	SIG	DATE	

PREPARED	TRACED	CHECKED	APPROVED
			FOR CONTROLLER C11 D. DUN

SCHEDULE FOR DRG. No.
C11-643

DATE :-22-12-83

SCHEDULE FOR CAT/PART NO. (a)
5120-004752

SH. OF

CII-166 (a)
(c)

SPECIFICATION NO. CII. 166

This specification is the property of the Defence Department, Government of India, and must be returned to the Controller, Controllerate of Inspection (Instruments), DEHRA DUN, on demand or on completion of the tender/order.

This specification or any pattern, drawings or any other information issued in connection herewith, may only be used for specific enquiries, tenders or orders placed by competent authority. This specification is not to be issued for any other purpose whatsoever without the express written sanction of the Controller, Controllerate of Inspection (Instruments, Ministry of Defence, Government of India, Raipur, DEHRA DUN (hereinafter called the CONTROLLER).

Designation TRIPOD, FIRE CONTROL INSTRUMENT, 1pIA

Cat/PART No. V6/1290-000252

Drawing No. CII.369

Specification to govern manufacture and inspection.

This issue cancells all previous issues of specification No.....

Issued by:-

The Controller,
Controllerate of Inspection (Instruments),
Ministry of Defence (DGI)
Raipur, DEHRA DUN 248 008

Contents: This specification consists of .....pages.

Note: Any person other than the authorised holder on obtaining possession of this document by finding or otherwise is requested to forward it together with his name and addss in a closed envelope to the Controller, Controllerate of Inspection (Instruments), Raipur, DEHRA DUN-248008.

MANTRALAYA NIRIKSHAN MAHANIDESHALAYA
DEHRADUN
MANTRA NIRIKSHAN NIYANTRANALAYA

for Niyantrak
Kendra Nirikshan Niyantranalaya
9-8-77 3609-1,42+1-2

P - 1B

Appendix "B"
Specification No
C11 - 166

Contents.

		Page No
1 -	General	2
2 -	Material	3
3 -	General Manufacturing Instructions	4
4 -	Workman Ship	5
5 -	Finish	6
6 -	Inspection	6
7 -	Marking	7
8 -	Description	8
9 -	Special Requirments	8
10 -	Tests	8
11 -	Warranty clause	9B
12 -	Packing Instruments	9

SECTION 1 - GENERAL

1. This specification holds good only for the order for which this is issued. Nothing shall affect the manufacturer of the responsibility to ensure that the supplied store fully conforms to the relevant drawings and specifications.

2. The manufacturer will be fully responsible for the safety of processes or operations in his works.

3. This specification or any drawings, masters, pattern of the stores issued to the contractor in connection with supply of the store shall be returned to the Controller in undamaged condition after the completion of the order or tender. In case of loss or damage to the above mentioned documents or stores the contractor will be liable to pay full compensation for the subject document or store. The Controller will be the sole authority to decide on the amount of compensation to be paid by the contractor for any loss or damage.

4. The accepted advance sample or certified sample where issued to the supplier will be used for general guidance only. The actual dimensions and other features of the store will strictly conform to the drawings and specifications.

5. Where Zinc Masters or other enlarged masters are issued to the manufacturer or his sub-contractor, the manufacturer will ensure that all intermediate and 1:1 negatives and positives made from the said masters are returned to this Controllerate on completion of the order.

6. The contractor shall afford the Controller, or his authorised representative, free of cost, all reasonable facilities for satisfying himself that the stores are being manufactured in accordance with the specification and other particulars supplied for this purpose, the Controller, or his authorised representative will have full access to the contractor's works at all times during the run of the contract.

7. The contractor is required to notify to the Controller and Inspecting Officer of all sub-contracts while placing the Supply Orders enclosing him a copy of the same.

8. Wherever International or IS Specification are quoted on the drawings, the contractor will make his own arrangements for the procurement of the latest issues of specifications from the Indian Standard Institution, Manak Bhavan, 9, Bahadur Shah Zafar Marg, NEW DELHI-110 001.

SPECIFICATION

2.1. The materials used shall be of the best quality, thoroughly sound, free from defects or inferiority in workmanship with their respective specifications as quoted in the drawings. Where numbers of specifications are not quoted in the drawings, the materials must be of the best commercial quality and it should be approved by the Controller of the Authorised representatives before taken into use.

2.2. Synthetic rubber, wherever specified of similar variety shall conform to specification No. IND/C/[illegible] and natural rubber wherever specified shall conform to IS:[illegible] (latest) unless otherwise specified.

2.3. Grease No. [illegible] (G.3) is recommended for use. The grease used should not get softened at 50°C and should not slow at + 70°C.

2.4. Timber, where used should be thoroughly seasoned, free from knots and sap, and shall be of straight grains. It should also be unfigured. It should conform to the specification given in the drawings. Moisture content should be as per IS:287 (latest) unless otherwise specified.

2.5. Plywood, wherever used, should conform to IS:303 BWR quality unless otherwise specified.

2.6. Canvas, wherever used, should be tropic proofed and should conform to specification No IS:[illegible] (latest).

2.7. Felt, wherever used, should be both gross and fine and should conform to IS:1719 unless otherwise specified.

2.8. Duck cotton, wherever used, should conform to specification IS:1422 (latest) unless otherwise specified.

2.9. Leather, wherever used, should conform to IS:[illegible] (latest) unless otherwise specified.

2.10. Paints and varnishes, wherever used, as finishing materials, shall be of best quality and shall not deteriorate or flake off when subjected to climatic and durability tests specified later in this specification.

2.11. Fillers, wherever used for filling various graduations and markings, shall not deteriorate or flake off when subjected to climatic and durability tests specified later in this specification. The fillers used shall be as per IS:[illegible].

2.12. [illegible] Wherever to be used, should conform to IS:849-1968, unless otherwise specified.

2.13. [illegible] Wherever indicated, should be [illegible] and it should be capable of withstanding [illegible] [illegible].

2.14. The manufacturer is to supply free of cost, samples of castings, pulleys, various materials intended to be used, for tests and trials. All materials must be inspected by the inspecting officer or his authorised representative before they are taken into use.

2.15. Wherever the component is to be cast, the manufacturer will intimate the inspecting officer well in advance to draw the test bars as per relevant Indian Standard specification.

2.16. The manufacturer shall give a warranty certificate that the materials used in the store are as per relevant drawings and specifications.

SECTION - 3.

GENERAL MANUFACTURING INSTRUCTIONS

3.1. All components shall be made to correct dimensions as per the drawings for interchangeability. No deviation from the drawings is permissible without prior approval of the Consultant.

3.2. All critical dimensions must be maintained within the limits of tolerance specified in the respective drawings.

3.3. All the drawings are in the Continental method of projection unless otherwise specified.

3.4. All dimensions are in terms of SI units unless otherwise stated.

3.5. Unbalanced dimensions other than hole and shaft shall conform to IS 2102 medium class of deviation.

3.6. Unbalanced dimensions for hole and shaft shall conform to IS 919 fine and H11 and h11 respectively.

3.7. Tolerance on angles, chamfers and radii shall conform to IS 2102 fine and medium class of deviation.

3.8. Fits between the mating parts shall be based on the unilateral H hole system as in IS:919.

[illegible] angles are used for [illegible], the [illegible] or [illegible] shall be closed curve unless otherwise specified.

SECTION 5 - FINISH

5.1 All working surfaces shall be left free from paints unless otherwise specified.

5.2 Final finished surfaces will receive a primer coat before final painting. Paint will be of service condition, in a clean paint in industrial. The paint used, shall conform to IS:1168 (latest) of Indian Standard colour 220.

5.3 All steel components shall be phosphated before painting as per Specification No. IS:3618(latest).

5.4 All aluminium components shall be anodised conforming to Indian Standard specification IS:1868 grade B(latest).

5.5 Brass components shall be brocked dull black unless otherwise specified.

5.6 The interior surfaces of all sand cast bodies meant for true accurate instruments shall be impregnated with optical varnish as specification No. IND/S. 217 before giving any other finish.

5.7 No patching or plugging to hide the defects shall be done without the authority of the Inspecting Officer.

SECTION 6 - INSPECTION

6.1 All problems requiring clarification in connection with the manufacture of the stores shall be referred to the Controller.

6.2 The material used in the manufacture of the stores ready for manufacture, may be inspected by the Controller or his authorised representative and forms under be given representative shall be afforded all facilities. If the material is found not conforming to the specifications, all stores manufactured from the said material, be liable to be rejected.

6.3 The manufacturer is to notify the Controller when he is in a position to start work and of all sub-contracts placed by him on sub-contractors. However, the responsibility for the supply of correct materials as per drawings and specification will be that of the manufacturer and the sub-

4.7 Wherever shims are used for adjustment, the number of shims used shall not exceed three unless otherwise mentioned.

SECTION 5 - FINISH

5.1 All bearing surface shall be left free from paints unless otherwise specified.

5.2 All painted surfaces will be given a primer coat before final painting which will be of service colour 06, if no other paint is indicated. The paint 06 used, shall conform to IS:168 (latest) of Indian Standard colour 220.

5.3 All steel components shall be phosphated before painting as per specification No. IS:3618 (latest).

5.4 All aluminium components shall be anodised conforming to Indian standard specification IS:1868 grade 3 (latest).

5.5 Brass components shall be bronzed dull black unless otherwise specified.

5.6 The interior surfaces of all sand cast bodies meant for tropicalised instruments shall be impregnated with optical varnish to specification No.IND/SA/3217 before giving any other finish.

5.7 No patching or plugging to hide the defects shall be done without the authority of the Inspecting Officer

SECTION 6 - INSPECTION

6.1 **Pre-Inspection**

The Contractor shall carry out initial inspection prior to tendering the stores to the Inspecting Officer to make sure that stores are of acceptable standard. A record to this effect shall be maintained and when so desired by the Inspecting Officer shall be made available to him.

6.2 Any points requiring elucidation in connection with the manufacture of the store shall be referred to the Controller.

6.3 The materials used in the manufacture of the store, at any stage of manufacture, may be inspected by the Controller or his authorised representative and for this purpose he or his representative shall be afforded all facilities. If the material is found not conforming to the specification all stores manufactured from the said material are liable to be rejected.

6.4 The manufacturer is to notify the Controller when he is in a position to start work and of all sub-contracts placed by him on sub-contractors. However, the responsibility for procurement of correct materials as per drawings and specification will be that of the manufacturer and the fact that the copy of sub-order/sub contract was sent to the Controller will not absolve him of his responsibility.

6.5 The manufacturer shall submit two advance samples of the store on order for approval/technical trials before proceeding with bulk production. One of the sample may be dismantled to check interchangeability of components. This sample will be handed over to the manufacturer in dismantled condition. Any incidental damage to the store during dismantling will be rectified by the contractor at his own cost.

6.6 If on examination 20% of the delivery is found defective or contrary to the terms of specification, the whose delivery may be rejected without further examination. For this purpose, stores may be picked at random from any portion of the consignment.

6.7 Control samples may be drawn from the firm's premises or consignee's end, for critical examination to any extent considered necessary by the Controller.

6.8 Rejection

In the event a store is given back to the manufacturer for rectification of defects, the manufacturer will ensure that the defects are attended to immediately without loss of time so that the manufacturer will not be entitled to dispose off that stores which is given to for rectification but not rejected without prior permission of the Inspector.

6.9 The stores shall be rendered for inspection sufficiently ahead of stipulated delivery period to avoid delay in inspection release of I/Note and despatch of stores.

6.10 The foregoing provisions shall apply equally to prime contractor and all of his sub-contractor.

SECTION 7 - MARKING

7.1 All components, wherever practicable, shall be marked suitably to bear the Cat/Pt No. as mentioned in the particulars.

7.2 The body of the instruments shall be marked with the nomenclature, Cat/Pt No., contractor's intials and year of supply in accordance with the particulars.

7.3 The registered number where required will be supplied by the inspecting authority on application and shall be engraved/stencilled at a place, as shown in the drawing. If no particular place is shown, it may be engraved at any suitable place.

6.7.1 During bulk inspection the inspector at his discretion can call for any number of samples ranging upto 2% of the quantity on order for dismantling to ascertain the dimensions and interchangeability of the components. The samples will be handed over to the manufacture in dismentled contition. Any incidental demage to the store during dismentling will be rectified by the contractor at his own cost.

SECTION 8 - DESCRIPTION

8.1 Tripod Fire Control Instrument, 101A is the lighter version of Stand, Instrument No.27, Mk.2. To make the latter stand lighter, the leg material wood has been replaced by aluminium. Stand, In Instrument, 101A mainly consists of three legs, head carrier, cover and clamping screw. The legs are attached to the head by means of brackets through hinge bolts. The legs are provided with shoes. The head carrier comprises plate, ring and socket. The cover consists of a main plate, wooden block, leather washer, plate and a hinge to join the cover to the head carrier. The clamping screw is used to fix the main equipment to the head carrier. When not in use, the cover is placed on the head carrier and clamped by means of the clamping screw. A hook is provided at the end of the clamping screw to hang a plumb bob. A leather strap is also provided to tie up the legs together.

SECTION 9 - SPECIAL REQUIREMENTS

9.1 Pine wood used for certain components of the tripod shall be free from knots, warps, shakes, cracks, rots and other defects.

9.2 Moisture content of wood shall be checked to specn IS 287 and shall be between 8 to 12%.

9.3 The legs shall swing freely about the hinge bolt axis when the wing nuts are released.

9.4 The stand shall be levelled with the help of a Simple spirit, circular cased Mk.2 (FL.4423A) by fixing it with plasticine on head carrier plate. A torque of 1 N.M. (0.1 kgfm) shall be applied on the head carrier, the air bell of the circular bubble shall remain in the centre of its run.

9.5 Top bearing surface of head plate, and the hinge bolt axes shall be mutually parallel. Top bearing surface of heads plate shall be perpendicular to the clamping screw axis.

SECTION 10 - TESTS

10.1 Visual: The stand shall be examined visually for the following defects:-

(a) Loose, missing or damaged screws, nuts or other components.

(b) Broken, dented or bent plates, legs, shoes, clamping screw etc.

(c) Knots, shakes, rots and other defects in the wooden parts.

(d) Cracked, warped or broken wooden parts.

(e) Defective castings.

(f) Unstitched, cracked or defective leather straps.

(g) Unsatisfactory finish.

RAKSHA MANTRALAYA NAVASHAHR DEHRA

10.2. Mechanical:

(a) The legs shall swing freely about the hinge bolt axis when the wing nuts are released.

(b) Hinge joining the cover to the head carrier shall function satisfactorily.

(c) Threads in the clamping screw shall engage the threads in the cover fully.

10.3. Moisture Content in the Wood of Stand components: Moisture content in the wooden parts shall be checked 50 specns. IS:287 with a Moisturemeter. The same shall measure between 8 and 12%.

10.4 Dimensional Checking: Threaded portion of the clamping screw and the dimension of head plate shall be accurately checked by suitable measuring instruments or by making special gauges. Other dimensions of the stand shall be checked in conformity with the drawing dimensions.

10.6 Top bearing surface of head plate and the hinge bolt axes shall be mutually parallel. Top bearing surface of head plate shall be perpendicular to the clamping screw axis.

10.8

10.7 Shoes: The spike portion of the shoes shall be driven in the hard ground free from rocks and stones by a wooden mallet. The shoes and the legs shall remain in undamaged condition after the ~~xx~~ test.

10.8 The stand shall be levelled with the help of a bubble spirit, circular, cased Mk.2 (FL-4CZSA) by fixing it with plasticine on head carrier plate. A torque of 1 N.m. (0.1 Kgfm) shall be applied on the head carrier, the air bell of the circular bubble shall remain in the centre of its run.

10.9 Leather Straps: The legs shall be tied up together with the leather straps. There shall not be any difficulty in doing so.

WARRANTY CLAUSE

SECTION 11 - PACKING INSTRUMENTS

11.1 Tripod Fire Control, Instrument, 101a shall be wrapped with brown packing paper and tied up with cord nicely. A suitable number of such stands shall be packed in a wooden box lined with waterproof paper. In between each stand there shall be padding of dry cotton waste. The stands shall be placed in such a manner that minimum possible dry cotton waste is used. After packing the stands, the top of the box shall be filled with cotton waste and then lid be closed. Special care shall be taken to ensure that the stands do not rattle or shift inside the box during transit. The total mass of any such packed box shall not exceed exceed 40 kg.

11.1 Each packing box shall be legibly marked as follows:-

(a) Nomenclature and part number of the store.
(b) Quantity.

Specn MOL-1-2 - 166

P - 9 A

10.10 CLIMATIC AND DURABILITY TESTS

10236

10.10.1 These are only type approval tests and shall be carried out as per relevant clause of specification IS:2352 (latest) on the Advance/ Control samples (a certain percentage not less than 3% of bulk) or whenever there is a change in design / production techniques or materials used in the manufacture of the store. Degree of severity is given against each test :-

TEST	DEGREE OF SEVERITY
(a) Cold Test	: (as per IS: 10236 (Part- III) At -30^0 C + 3^0 C for 4 hrs.
(b) Dry Heat Test	: (as per IS: 10236 Part- II) At 70^0 C ± 3^0 C for 16 hrs.
(c) Drop Test	: (as per IS:10236 Part- 15) The shall be dropped once only from the height of 90 Cm on to 150 mm thick good river sand cover with one layer of canvas.
(d) Vibration Test	(as per IS: 10236 Part- 1A) The test shall be carried out at 7 to 8 Hz and 150 mm amplitude for 15 minutes.
(e) Damp Heat Test	: (as per IS: 10236 Part- IV) At 55^0 C, RH 95% (Min) – 2 Cycles of 24 hrs each.

10.10.2 After the tests carried out as per para 10.10.1 (a) to (d). The tripod shall be checked for damage or deterioration if any.

10.10.3 CLIMATIC AND DURABILITY TESTS (BULK SUPPLY)

10.10.3.1 Drop test and test and vibration test shall be carried out on 100% of bulk supply as per clause 10.7.1(c) & (d). After the test carried out as per para 10.10.1(c) & (d), the tripod shall be checked for damage or deterioration, if any.

10.3.2 Damp Heat Test : As per clause 10.10.1. (e) on 5% of bulk Supply.

P- 9 B

WARRANTY CLAUSE

11.1 The store shall bear a warranty of supplier against defective materials design, workmanship and performance for a period of two years from the date of receipt at consignee's end . During this period , if any of the store be found defective by the consignee, the same shall be replaced by the supplier free of charge at consignee's end as soon as possible but not later than six months from the date of reporting.

12. Packing

11.1. Each packing box shall be legibly marked as follows:-

(a) Nomenclature and part number of the store.

(b) Quantity.

(c) Name and address of the consignee for quick delivery.

(d) FRAGILE - HANDLE WITH CARE!.

DGOFRAMUN-248 DOS
Dated

CONTROLLER OF INSPECTION (INSTRUMENTS)