# C-2318A

ALL DIMNS. ARE IN MM.
UNTOL. DIMNS. ARE AS PER IS:2102 (MEDIUM CLASS).

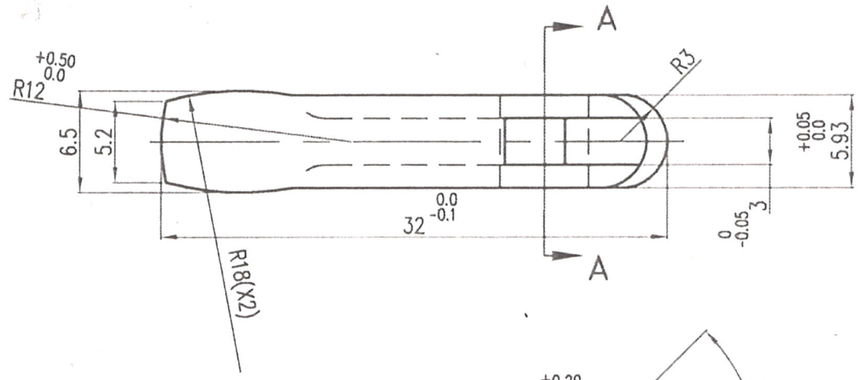


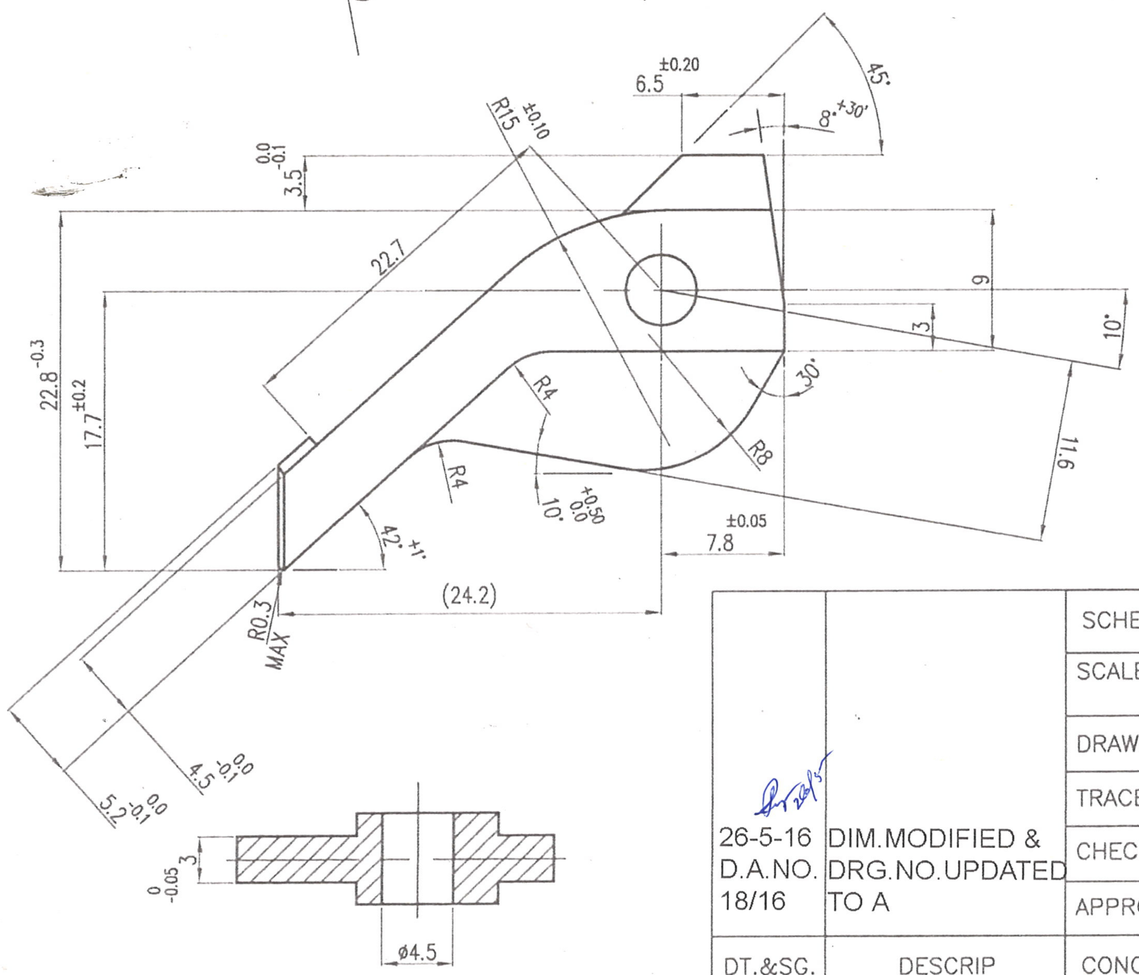


SECTION A-A

NOTE:-
HARDNESS (PRECISION CASTING):18 HRC (MAX)
AFTER COMPLETE MACHINING IT WILL BE
HEAT TREATED & WILL GET THE REQUIRED HARDNESS
i.e HRN30= 65 ±3 (45 TO 49 HRC)

MATERIAL- BS:3146-PT 1-1974 CLA-3
HARDENED & TEMPERED
HRC 45 TO HRC 49 IN F/C

▽▽ (▽▽▽)

| | | | | |
|---|---|---|---|---|
| 26-5-16 D.A.NO. 18/16 | DIM.MODIFIED & DRG.NO.UPDATED TO A | SCHEDULE NO : | COMPT- EXTRACTOR 84 mm MK-III | STORE DRG. No. F 1303-007330 |
| | | SCALE : 2 : 1 / PROJECTION : THIRD ANGLE | | |
| | | DRAWN BY : R.D/ 29.09.15 | INVESTMENT CASTING FOR EXTRACTOR | |
| | | TRACED BY : | | |
| | | CHECKED BY : P.ROY/ 05.10.15 | DRG. NO. :- C-2318A | |
| | | APPROVED BY : R.DAS/ 07.10.15 | | |
| DT.&SG. | DESCRIP | CONCURRED BY: JWM/Gun E | M / C : | NO. OF SHTS. : 1 |
| AMENDMENTS | | DATE: 29/5/16 SIGN.: | G. & S. FY. COSSIPORE | SHT. NO. : 1. |

DIMENSIONS ARE SUPPLIED BY Gun E VIDE MEMONO- 107/80/15-16/PRECISION CASTING , DATED- 29-09-15