DRAWING NUMBER
92-1106-202

▽7 UNLESS OTHERWISE SPECIFIED

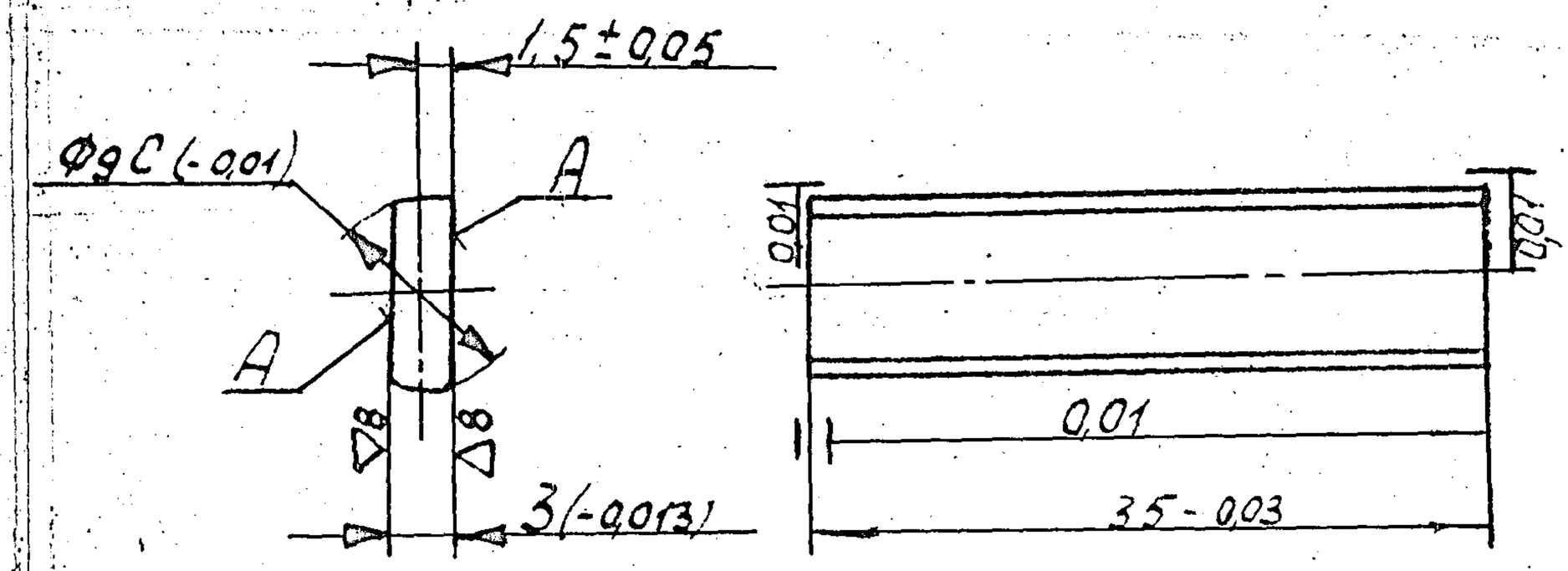

1. TO BE NITRIDED ALL OVER 0.25 - 0.4
   ~~HV ≥ 600~~ ≥78HRA. (1)
2. SURFACE "A" SHOULD BE POLISHED.
3. SHARP EDGES SHOULD BE BLUNTED BY RADIUS OR CHAMFER TO 0.3
4. REDUCTION OF DIMENSION 3.5-0.03 BY 0.013 IS PERMITTED PROVIDED ASSEMBLY CLEARANCES ARE MAINTAINED IN UNIT 92.1106.200.
5. TO BE OXIDIZED.

F-12a

PILOT SAMPLE SHOULD BE APPROVED BY A H S P BEFORE BULK PRODUCTION

			EST WT 0.7 g	TO BE STAMPED OR MARKED WHERE INDICATED THUS # (LETTERS)
			ALL SHARP EDGES AND CORNERS TO BE REMOVED UNLESS OTHERWISE STATED MACHINED CORNERS TO HAVE R OUTSIDE R INSIDE EQUIVALENT CHAMFERS ARE PERMISSIBLE.	
			MATERIAL: STEEL 38x2M ГОСТ A TY 14-1-950-74	USED ON 92-1106-200-СБ
1	26-7-93	AUTHY. НТП46-32-87.		
ISSUE	DATE	NATURE OF AMENDMENTS		
DRN		SCALE: 2 : 1	CONTROLLERATE OF INSPECTION (HEAVY VEHICLES) AVADI	
CHD		DIMENSIONS IN mm		
TCD		TOLERANCE ON DIMNS UNLESS OTHERWISE STATED	TITLE ROTOR BLADE	
APPD		ALL THREADS CONFORM TO	D S CAT NUMBER	DRAWING NUMBER 92-1106-202
DATE				

SIZE A4

DRAWING NUMBER
92 1106 203

TOLERANCES FOR FREE DIMENSIONS AS PER ACCURACY CLASS 5

Допуски на свободные размеры по 5 классу ти.

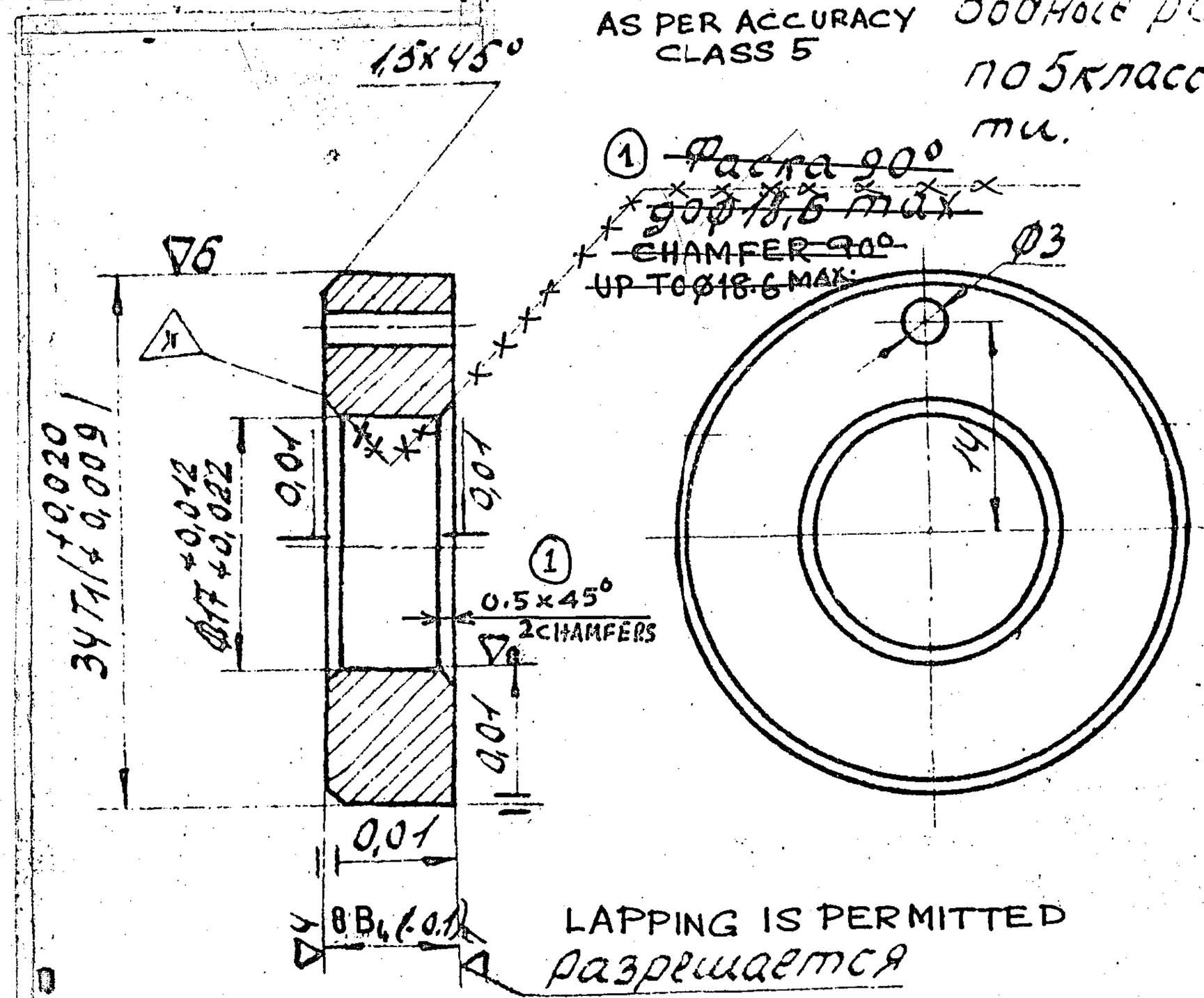

LAPPING IS PERMITTED
Разрешается притерто. Применение абразивов не допускается.
USE OF ABRASIVES IS NOT ALLOWED

SHARP EDGES SHOULD BE BLUNTED TO R 0.3

PILOT SAMPLE SHOULD BE APPROVED BY A H S P BEFORE BULK PRODUCTION

EST WT 49.2 g	TO BE STAMPED OR MARKED WHERE INDICATED THUS ⊕ (LETTERS)		
ALL SHARP EDGES AND CORNERS TO BE REMOVED UNLESS OTHERWISE STATED MACHINED CORNERS TO HAVE R OUTSIDE R INSIDE EQUIVALENT CHAMFERS ARE PERMISSIBLE.			
MATERIAL BRONZE БР ОС 10-10 OST 1.90064-72 GROUP II	USED ON 92 1106 200		
1 / 31-5-93 / AUTHY. NOTN. NO. HTП46-126-88			
ISSUE / DATE / NATURE OF AMENDMENTS			
DRN	SCALE 2 : 1	CONTROLLERATE OF INSPECTION (HEAVY VEHICLES) AVADI	
CHD	DIMENSIONS IN mm		
TCD	TOLERANCE ON DIMNS UNLESS OTHERWISE STATED	TITLE THRUST BEARING LOWER	
APPD	ALL THREADS CONFORM TO	D S CAT NUMBER	DRAWING NUMBER 92 1106 203
DATE			

SIZE A4

F 12 a

DRAWING NUMBER
92-1106-204

TOLERANCE FOR FREE DIMENSION-AS PER 22 AT 52

▽3 UNLESS OTHERWISE SPECIFIED

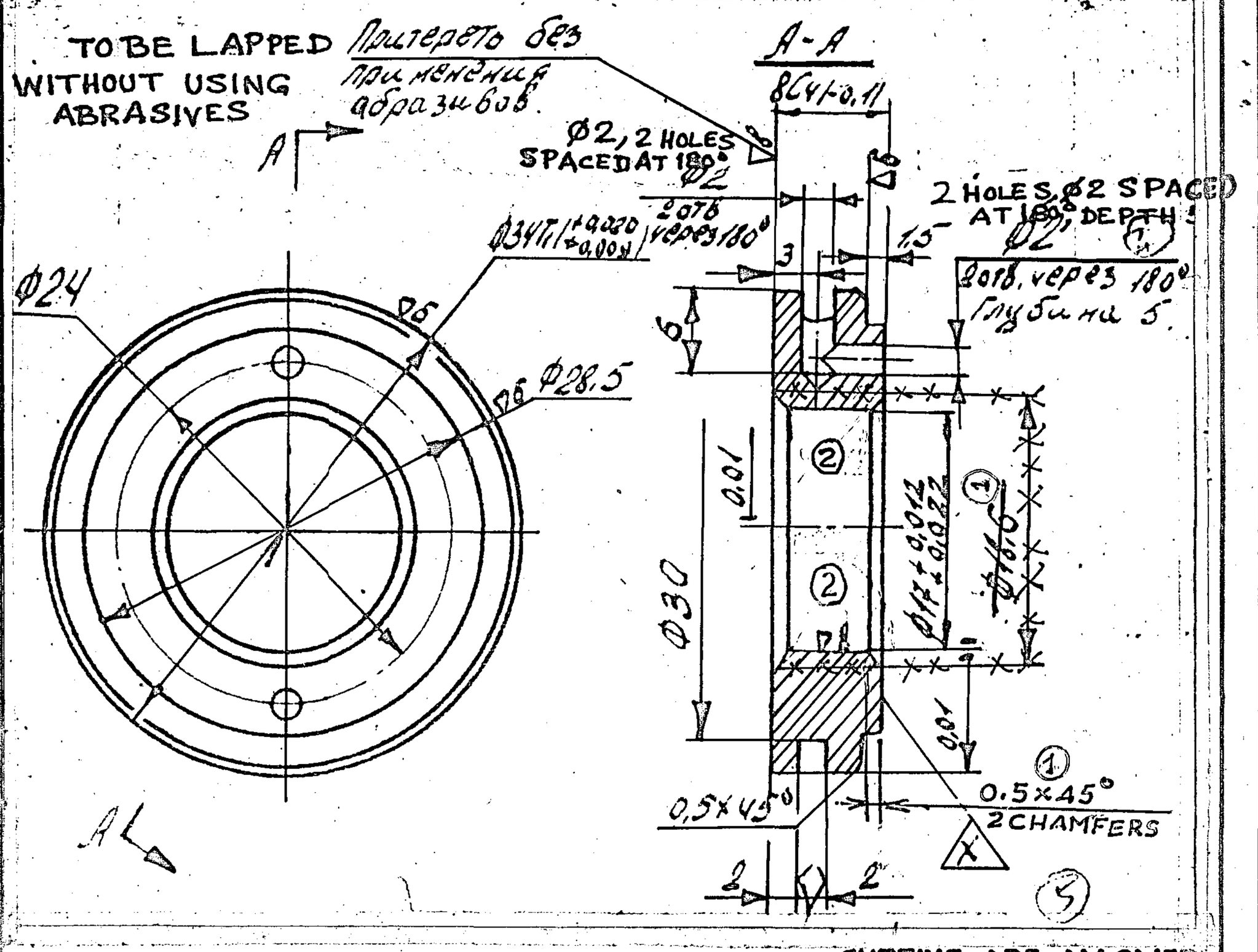

CUTTING ARE ALLOWED AFTER DRILLING OF HOLES

PILOT SAMPLE SHOULD BE APPROVED BY A H S P BEFORE BULK PRODUCTION

ISSUE	DATE	NATURE OF AMENDMENTS
2	31-5-93	AUTHY. NOTN. NO. HTП46-011-89
1	5.5.93	AUTHY. BK NO. 126-83.

EST WT 41 g

TO BE STAMPED OR MARKED WHERE INDICATED THUS # (LETTERS)

ALL SHARP EDGES AND CORNERS TO BE REMOVED UNLESS OTHERWISE STATED MACHINED CORNERS TO HAVE R OUTSIDE R INSIDE EQUIVALENT CHAMFERS ARE PERMISSIBLE.

MATERIAL: BRONZE OC 10-1 OST 1.900 64-72, Z GROUP II

USED ON 92-1106-200-C6

DRN

CHD

TCD

APPD

DATE

SCALE : 2 : 1

DIMENSIONS IN mm

TOLERANCE ON DIMNS UNLESS OTHERWISE STATED

ALL THREADS CONFORM TO

CONTROLLERATE OF INSPECTION (HEAVY VEHICLES) AVADI

TITLE THRUST BEARING UPPER

D S CAT NUMBER

DRAWING NUMBER 92-1106-204

SIZE A4

DRAWING NUMBER
92 1106 205

▽4 (▽)

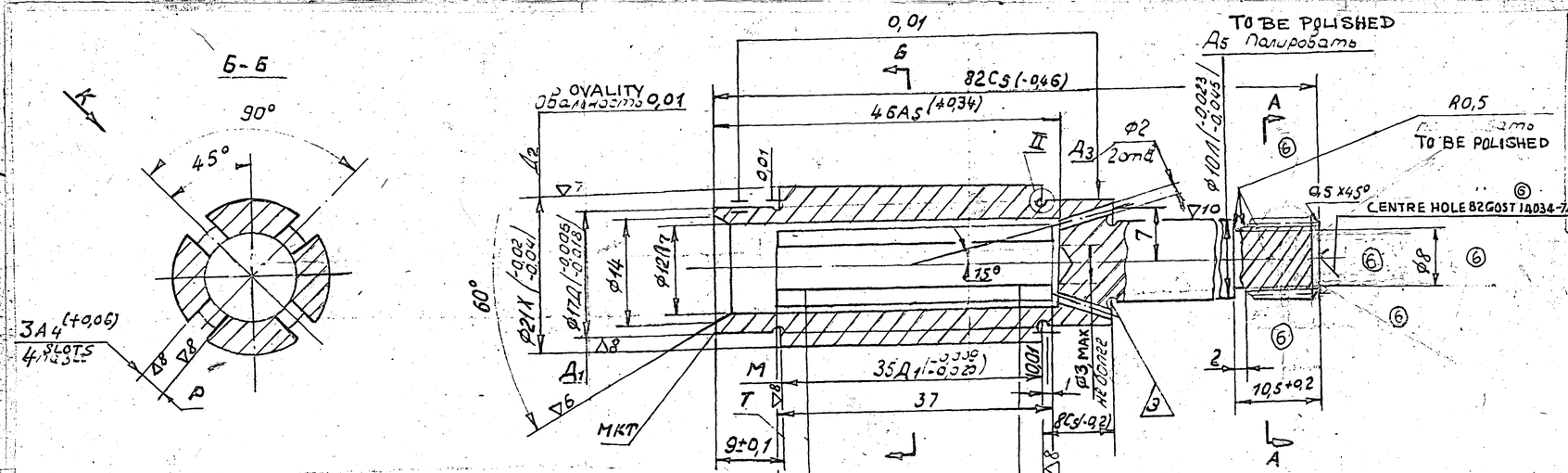

PARAMETERS OF INVOLUTE PROFILE SPLINES		
MODULE	m	0,8
NUMBER OF TEETH	Z	12
PRESSURE ANGLE OF BASIC RACK	α	30°
TOOTH THICKNESS ALONG REFERENCE CIRCLE ARC	S	1,15 -0,06 -0,10
TOTAL ERROR OF SPLINE DISTORTION	β	0,03
RUN-OUT OF SPLINES PROFILE RELATIVE TO SURFACE A1.		0,05

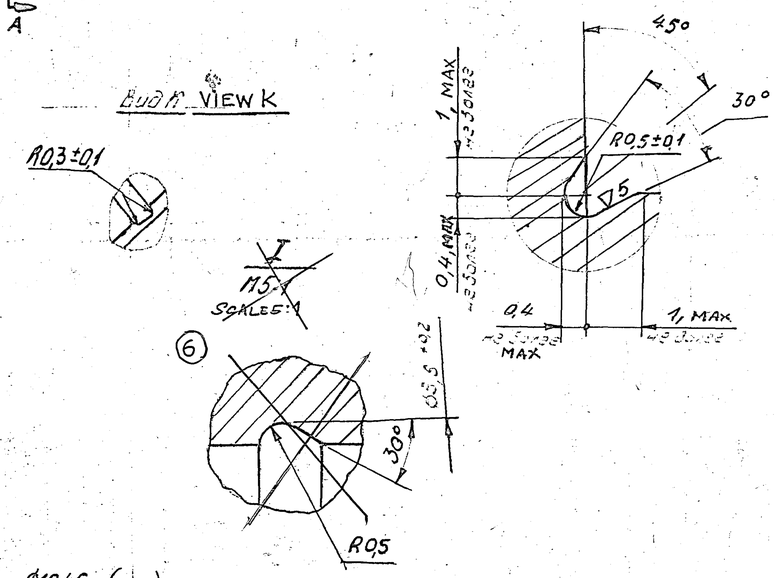

1. TO BE NITRIDED ALL OVER TO A DEPTH OF 0.25-0.5 HRC ≥ ~~58~~ 80. IT IS ALLOWED TO CHECK HARDNESS ON SURFACE A_2. CORE - HRC 26-35.
2. TOLERANCES FOR FREE DIMENSIONS - AS PER 22AT52.
3. SURFACES "T" AND "⊓ 1" SHOULD BE LAPPED AFTER OXIDIZING.
4. SEBERATE MILLING MARKS ARE ALLOWED ON SURFACES "P"
5. SHIFT OF OPENINGS "P" FROM THE AXIS OF SURFACE "⊓ 1" SHOULD NOT EXCEED 0.05mm.
6. NON PARALLELISM OF SURFACES OF OPENINGS "P" RELATIVE TO THE AXIS OF SURFACE ⊓ 2 AND THEIR RELATIVE NON - SQUARENESS SHOULD NOT EXCEED 0.05mm.
7. RUN-OUT OF SURFACE ⊓ 2 RELATIVE TO SURFACES ⊓ 1, ⊓ 5 . SHOULD NOT EXCEED 0.02mm.
8. THE POSITION OF HOLES ⊓ 3 RELATIVE TO OPENINGS "P" - ARBITRARY.
9. INCREASE OF DIMENSION "P" BY 0.02mm ON SECTIONS "L" IS ALLOWED.
10. REDUCTION OF DIMENSION "M" BY 0.013mm. IS ALLOWED PROVIDED, ASSEMBLY CLEARANCES ARE MAINTAINED IN THE ASSEMBLY 92.1106.280
11. TO BE OXIDIZED EXCEPT FOR SURFACES ⊓ 5. PARTIAL ABSENCE OF OXIDIZED LAYER IS ALLOWED ON SURFACE ⊓ 2.

PILOT SAMPLE SHOULD BE APPROVED BY A H S P BEFORE BULK PRODUCTION.

EST. MASS	TO BE STAMPED OR MARKED WHERE INDICATED THUS # (LETTERS)
80 g	

ALL SHARP EDGES AND CORNERS TO BE REMOVED UNLESS OTHERWISE STATED MACHINED CORNERS TO HAVE R OUTSIDE R INSIDE EQUIVALENT CHAMFERS ARE PERMISSIBLE.

ISSUE	DATE	NATURE OF AMENDMENTS
6	16-7-93	AUTHY. HTП 46-128-88.
5	5-7-93	AUTHY. HTП 46-28-86
4		

DRN
CHD
TCD
APPD
DATE
SCALE - 2 : 1
DIMENSIONS IN mm.
TOLERANCE ON DIMNS UNLESS OTHERWISE STATED.
ALL THREADS CONFORM TO

MATERIAL:- STEEL 38 X 2 MIOA TY 14-1 959 74

USED ON:- 92 1106 200

CONTROLLERATE OF INSPECTION (HEAVY VEHICLES) AVADI

TITLE:- ROTOR

D S CAT NUMBER

DRAWING NUMBER 92 1106 205

F12a

SIZE A2

DRAWING NUMBER
92 1106 206

▽8(▽)

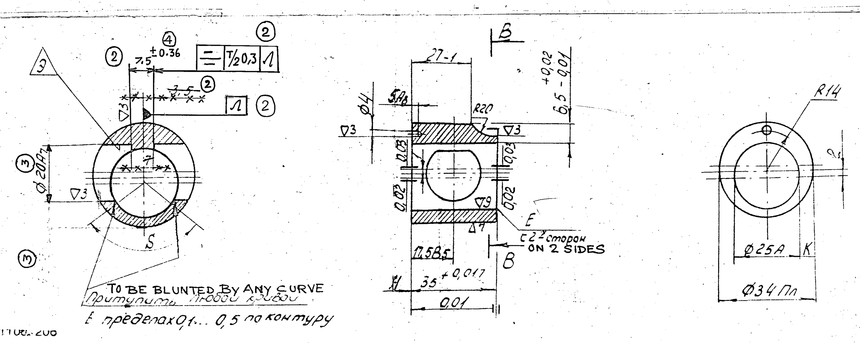

92.1106.206

1. TOLERANCES FOR FREE DIMENSIONS - AS PER ACCURACY CLASS 7.
2. TO BE NITRIDED ALL OVER. THE DEPTH OF NITRIDED LAYER ALONG THE INTERNAL DIAMETER OF HOLE 0.2-0.4mm.
   (1) ≥ 78HRA. ~~HV≥ 600.~~ HARDNESS OF THE CORE HRC 30-35.
3. ELLIPTICITY ALONG DIAMETER "K" IN SECTOR "S" SHOULD BE WITHIN THE TOLERANCE.
4. SHARP EDGES SHOULD BE BLUNTED BY RADIUS OR CHAMFER UPTO 0.3mm. CORNERS "E" MAY BE ROUNDED OFF BY RADIUS NOT MORE THAN 0.05mm.
5. REDUCTION OF DIMENSION "H" BY 0.013mm. IS ALLOWED PROVIDED ASSEMBLY CLEARANCES ARE MAINTAINED IN THE UNIT.
6. DIAMETER "K" AGAINST THE OPENINGS MAY BE INCREASED UP TO 25.05mm.
7. TO BE OXIDIZED.

PILOT SAMPLE SHOULD BE APPROVED BY A H S P BEFORE BULK PRODUCTION.

EST. MASS.	TO BE STAMPED OR MARKED WHERE INDICATED THUS ⊕ (LETTERS)
83 g	

ALL SHARP EDGES AND CORNERS TO BE REMOVED UNLESS OTHERWISE STATED MACHINED CORNERS TO HAVE R OUTSIDE R INSIDE EQUIVALENT CHAMFERS ARE PERMISSIBLE.

ISSUE	DATE	NATURE OF AMENDMENTS
4	10-6-93	AUTHY. BK NO. HTП 46-041-89
3	10-6-93	AUTHY. BK NO. HTП 46-010-89.
2	9-6-93	AUTHY. BK NO. HTП 46-09-87ПИ.
1	3-6-93	AUTHY. BK NO. HTП 46-32-87

DRN
CHD
TCD
APPD
DATE
SCALE - 1 : 1
DIMENSIONS IN mm.
TOLERANCE ON DIMNS UNLESS OTHERWISE STATED.
ALL THREADS CONFORM TO

MATERIAL:- STEEL 30 X 2M ГОА TY 14-1-950-74
USED ON:- 92-1106-200
CONTROLLERATE OF INSPECTION (HEAVY VEHICLES) AVADI
TITLE:- SLEEVE
D S CAT NUMBER
DRAWING NUMBER 92 1106 206

SIZE A2

92-1106-206

DRAWING NUMBER
92 1106 210

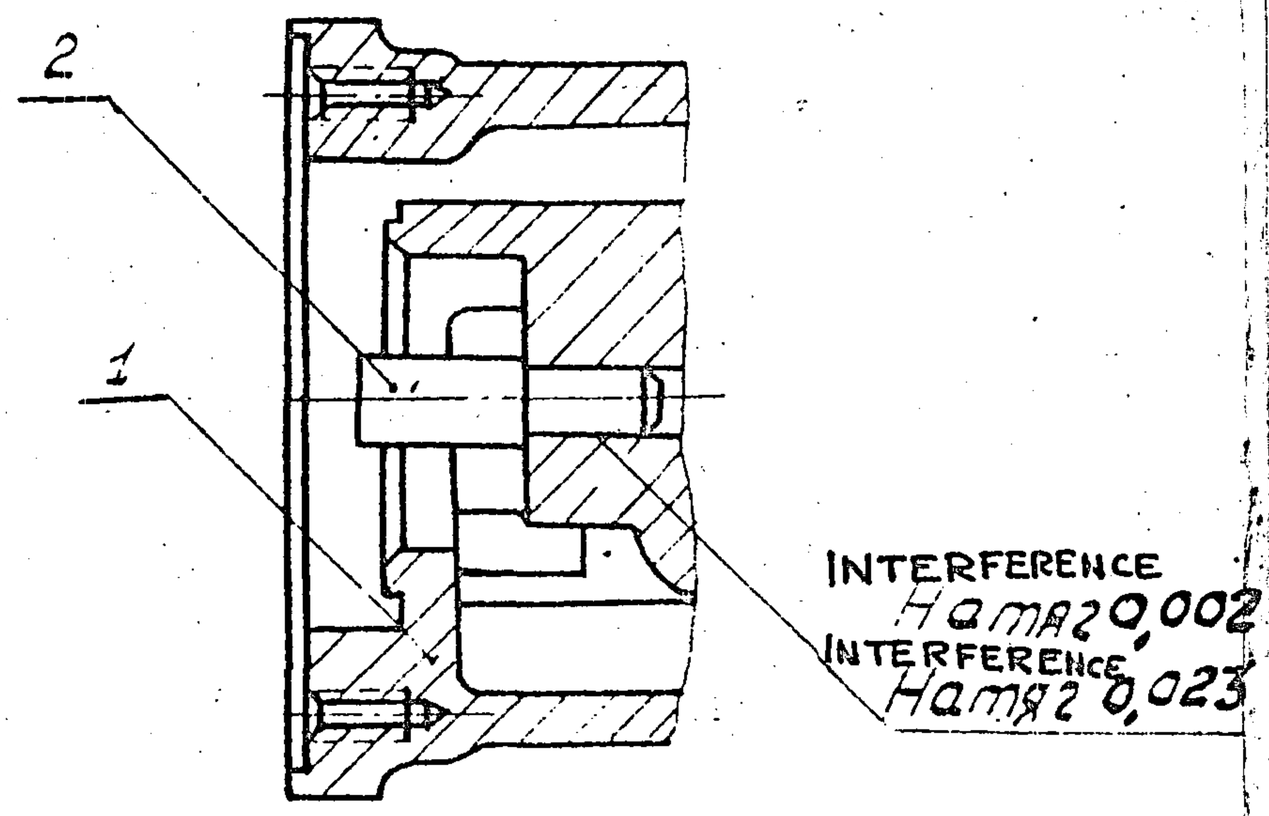

COMPONENT 92.1106212
SHOULD BE PRESS FITTED
AS FAR AS IT WILL GO.

PILOT SAMPLE SHOULD BE APPROVED BY A H S P BEFORE BULK PRODUCTION

EST WT 456 g	TO BE STAMPED OR MARKED WHERE INDICATED THUS # (LETTERS)		
ALL SHARP EDGES AND CORNERS TO BE REMOVED UNLESS OTHERWISE STATED MACHINED CORNERS TO HAVE R OUTSIDE R INSIDE EQUIVALENT CHAMFERS ARE PERMISSIBLE.			
MATERIAL —	USED ON 92 1106 010 CB		
ISSUE	DATE	NATURE OF AMENDMENTS	
DRN	SCALE 1 : 1	CONTROLLERATE OF INSPECTION (HEAVY VEHICLES) AVADI	
CHD	DIMENSIONS IN mm		
TCD	TOLERANCE ON DIMNS UNLESS OTHERWISE STATED	TITLE SUB ASSY BODY PUMP	
APPD	ALL THREADS CONFORM TO	D S CAT NUMBER	DRAWING NUMBER 92 1106 210
DATE 11/1			

F 12a

SIZE A4

DRAWING NUMBER
92-1106-211

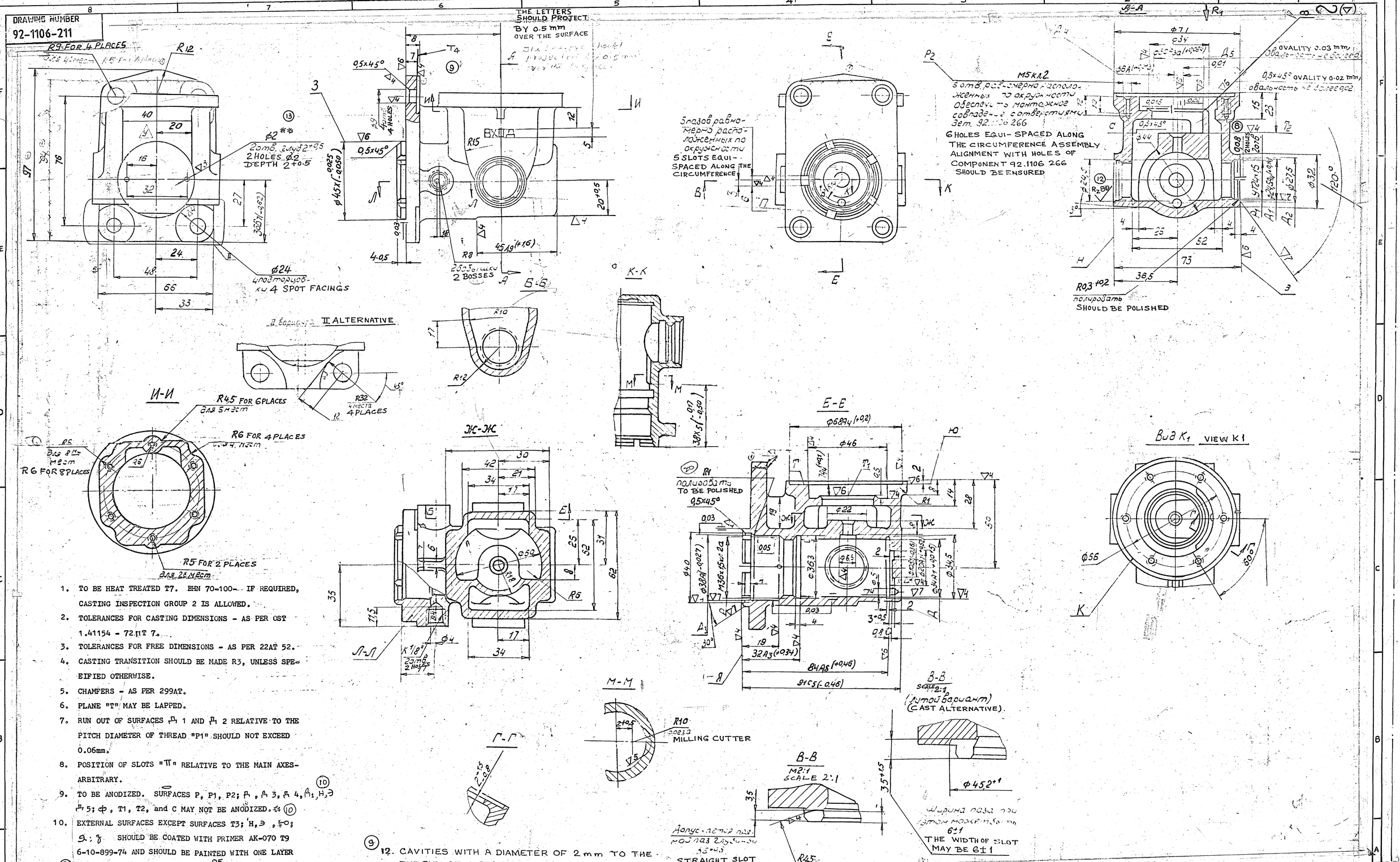

1. TO BE HEAT TREATED T7. BHN 70-100 IF REQUIRED, CASTING INSPECTION GROUP 2 IS ALLOWED.
2. TOLERANCES FOR CASTING DIMENSIONS - AS PER OST 1.41154 - 72 ПТ 7.
3. TOLERANCES FOR FREE DIMENSIONS - AS PER 22AT 52.
4. CASTING TRANSITION SHOULD BE MADE R3, UNLESS SPECIFIED OTHERWISE.
5. CHAMFERS - AS PER 299AT.
6. PLANE "T" MAY BE LAPPED.
7. RUN OUT OF SURFACES Д 1 AND Д 2 RELATIVE TO THE PITCH DIAMETER OF THREAD "P1" SHOULD NOT EXCEED 0.06mm.
8. POSITION OF SLOTS "П" RELATIVE TO THE MAIN AXES-ARBITRARY.
9. TO BE ANODIZED. SURFACES P, P1, P2; Д, Д 3, Д 4, Д1, Н, Э Д 5; Ф, T1, T2, and C MAY NOT BE ANODIZED. * (10)
10. EXTERNAL SURFACES EXCEPT SURFACES T3; Н, Э, Ю; Я; Ъ SHOULD BE COATED WITH PRIMER AK-070 T9 6-10-899-74 AND SHOULD BE PAINTED WITH ONE LAYER (11) OF ENAMEL BЛ-725 TY 6-10-866-75. IT IS PERMITTED TO USE PRIMER ГФ-032, YELLOW TY6-10-982-75 AND ENAMEL ГФ-820 TY-6-10-982-75.
11. VARIATION IN WALL THICKNESS OF BEADING "K" SHOULD NOT EXCEED 1.6mm.
(10) * PARTIAL ACCEPTED COATINGS ARE ALLOWED ON THE SURFACES Д1, Н, Э.
(9) 12. CAVITIES WITH A DIAMETER OF 2 mm TO THE EXTENT OF 3 PLACES MAX ARE ALLOWED ON PLANE T4 TO A DISTANCE OF 1.5 mm FROM THE EDGE OF MACHINED SURFACE. INDIVIDUAL CAVITIES WITH DIAMETER UPTO 1 mm ARE NOT TO BE TAKEN INTO ACCOUNT.
(13) 13. ** TO BE MACHINED AFTER ANODIC OXIDATION.

PILOT SAMPLE SHOULD BE APPROVED BY A H S P BEFORE BULK PRODUCTION.

EST. MASS	TO BE STAMPED OR MARKED WHERE INDICATED THUS *
451 g	LETTERS)

ALL SHARP EDGES AND CORNERS TO BE REMOVED UNLESS OTHERWISE STATED MACHINED CORNERS TO HAVE R OUTSIDE R INSIDE EQUIVALENT CHAMFERS ARE PERMISSIBLE.

ISSUE	DATE	NATURE OF AMENDMENTS
13	14-6-93	Authy No HTП 46-88-88
12	14-6-93	Authy No HTП 46-97-88
11	9-6-93	Authy No HTП 46-84-87
10	7-6-93	Authy No HTП 46-54-87
9	4-6-93	Authy No HTП 46-52-87
8	24-5-93	Authy No. HTП 46-66-87 пц

DRN
CHD
TCD
APPD
DATE
SCALE -1 : 1
DIMENSIONS IN mm.
TOLERANCE ON DIMNS UNLESS OTHERWISE STATED.
ALL THREADS CONFORM TO

MATERIAL:-ALUMINIUM ALLOY АЛ-6 GROUP 2A OST. 190021-79

USED ON:- 92-1106-210 СБ

CONTROLLERATE OF INSPECTION (HEAVY VEHICLES) AVADI

TITLE:- BODY PUMP

D S CAT NUMBER

DRAWING NUMBER 92-1106-211

DRAWING NUMBER
92-1106-212

▽5 UNLESS OTHERWISE SPECIFIED
TOLERANCES FOR FREE DIMENSIONS
AS PER 22 AT 52

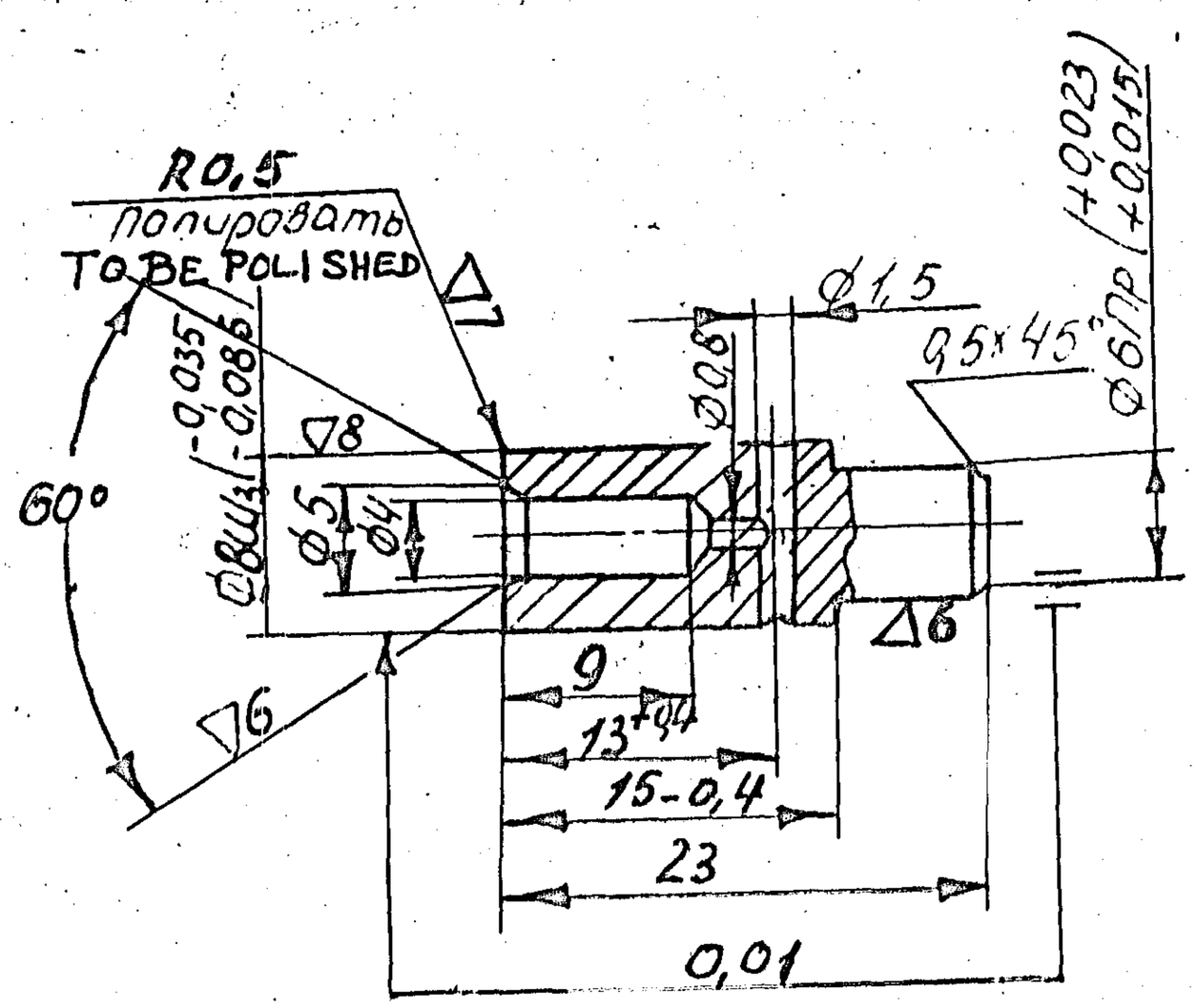

1. TO BE CYANIDED, h 0.15 - 0.45 HRC ≥ 58
2. CORE HRC 24 - 42
3. TO BE MARKED ON A TAG.
4. HARDNESS SHOULD BE CHECKED ON TEST PIECES.

PILOT SAMPLE SHOULD BE APPROVED BY A H S P BEFORE BULK PRODUCTION

EST WT 5 g	TO BE STAMPED OR MARKED WHERE INDICATED THUS ✠ (LETTERS)		
ALL SHARP EDGES AND CORNERS TO BE REMOVED UNLESS OTHERWISE STATED MACHINED CORNERS TO HAVE R OUTSIDE R INSIDE EQUIVALENT CHAMFERS ARE PERMISSIBLE.			
MATERIAL: STEEL 12xH3A TY 14-1-950-74	USED ON 92-1106-210-C6		
ISSUE	DATE	NATURE OF AMENDMENTS	
DRN	SCALE: 2 : 1	CONTROLLERATE OF INSPECTION (HEAVY VEHICLES) AVADI	
CHD	DIMENSIONS IN mm		
TCD	TOLERANCE ON DIMNS UNLESS OTHERWISE STATED	TITLE GUIDE	
APPD	ALL THREADS CONFORM TO	D S CAT NUMBER	DRAWING NUMBER 92-1106-212
DATE			

F 12a SIZE A4

DRAWING NUMBER
92 1106 221

TOLERANCE FOR FREE DIMENSIONS AS PER 22 AT 52

▽4

VIEW K Вид К
SCALE 5:1 М 5:1

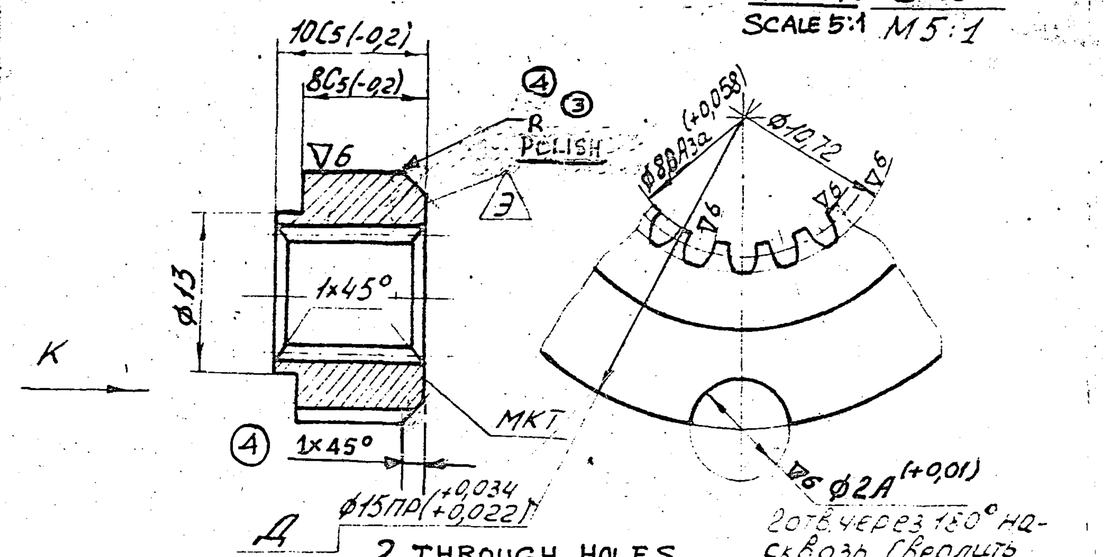

2 THROUGH HOLES Ø2A(+0.01) SPACED AT 180°. TO BE DRILLED TOGETHER WITH COMPONENT 92.1106 222 IN ASSEMBLY 92.1106 220

TABLE OF PARAMETERS OF INVOLUTE PROFILE SPLINES		
MODULE	m	0,8
NUMBER OF TEETH	Z	12
PRESSURE ANGLE OF BASIC RACK	αD	30°
REFERENCE DIAMETER	αD	9,6
WIDTH OF TOOTH SPACE ALONG THE REFERENCE CIRCLE ARC	S	$1,255^{-0,12}_{+0,06}$
RUNOUT OF SPLINES PROFILE RELATIVE TO Ø A		0,05

Термообработ-
ка. то HRC 26...32
группа контроля 4 ОСТ 100021-72.
2. Оксидировать.

1. TO BE HEAT TREATED HRC 26-32 INSPECTION GROUP 4 OST 100021-~~72~~ 78. (2)
2. TO BE OXIDISED.

PILOT SAMPLE SHOULD BE APPROVED BY A H S P BEFORE BULK PRODUCTION.

EST. MASS	TO BE STAMPED OR MARKED WHERE INDICATED THUS ✠ (LETTERS)
20 g	

ALL SHARP EDGES AND CORNERS TO BE REMOVED UNLESS OTHERWISE STATED MACHINED CORNERS TO HAVE R OUTSIDE R INSIDE EQUIVALENT CHAMFERS ARE PERMISSIBLE.

ISSUE	DATE	NATURE OF AMENDMENTS
4	1-6-93	AUTHY. NOTN. NO. HTП 46-024-89
3	1-6-93	AUTHY. NOTN. NO. HTП 46-123-88
2	31-5-93	AUTHY. NOTN. NO. HTП 46-84-87

DRN	
CHD	
TCD	
APPD	
DATE	
SCALE:- 2 : 1	
DIMENSIONS IN mm.	
TOLERANCE ON DIMNS UNLESS OTHERWISE STATED.	
ALL THREADS CONFORM TO	

MATERIAL:- STEEL 30 X A TY 14-1-950-74

USED ON:- 92 1106 220

CONTROLLERATE OF INSPECTION (HEAVY VEHICLES) AVADI

TITLE:- BUSH SPLINED

D S CAT NUMBER

DRAWING NUMBER 92 1106 221

A3

DRAWING NUMBER
92-1106-222

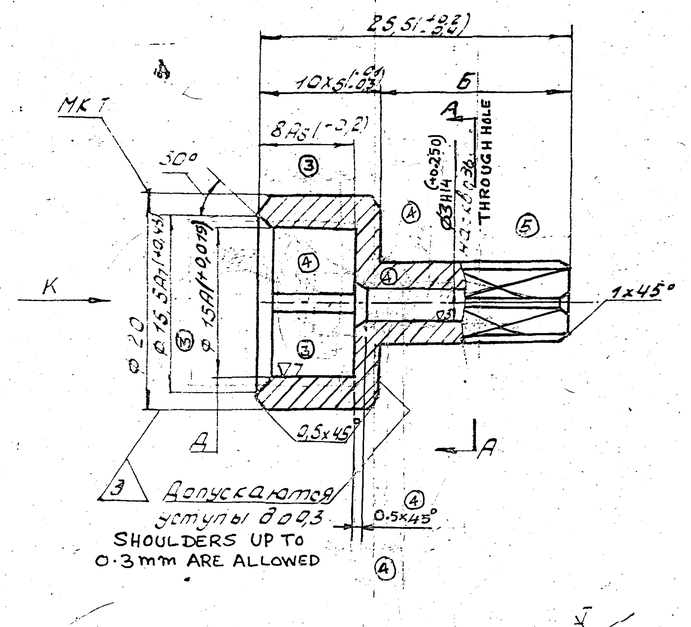

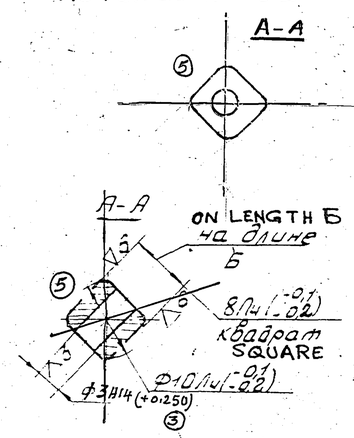

Вид K
VIEW K

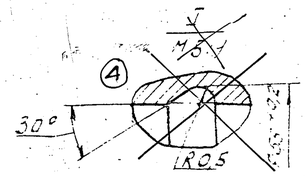

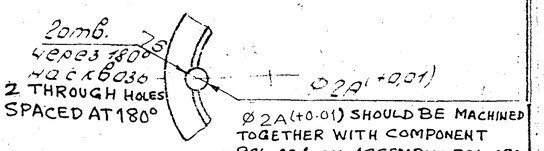

Ø2A(+0·01) SHOULD BE MACHINED TOGETHER WITH COMPONENT 896.026 ON ASSEMBLY 896.080

▽5 Остальное

Допуски на свободные размеры по 22АТ52.

TOLERANCE FOR FREE DIMENSIONS AS PER 22 AT 52

1. TO BE HEAT TREATED HRC 26-32.
   INSPECTION GROUP 4 OST 100021-~~72~~78 (2)
2. SHIFT OF SQUARE AXIS AND SURFACE ⌀ Д RELATIVE TO EACH OTHER SHOULD NOT EXCEED 0.1 mm.
3. TO BE OXIDIZED.

PILOT SAMPLE SHOULD BE APPROVED BY A H S P BEFORE BULK PRODUCTION.

EST. MASS	TO BE STAMPED OR MARKED WHERE INDICATED THUS # (LETTERS)
29 g	

ALL SHARP EDGES AND CORNERS TO BE REMOVED UNLESS OTHERWISE STATED MACHINED CORNERS TO HAVE R OUTSIDE R INSIDE EQUIVALENT CHAMFERS ARE PERMISSIBLE.

ISSUE	DATE	NATURE OF AMENDMENTS
5	26-7-93	AUTHY. HTM 46-10-90
4	18-7-93	AUTHY. HTM 46-128-88
3	12-7-93	AUTHY. HTM 46-123-88
2	31-5-93	AUTHY. HTM 46-84-87

DRN
CHD
TCD
APPD
DATE
SCALE 2 : 1
DIMENSIONS IN mm.
TOLERANCE ON DIMNS UNLESS OTHERWISE STATED!
ALL THREADS CONFORM TO

MATERIAL:- STEEL 30xA TY 14-1 950-74

USED ON:- 92-1106-220-C6

CONTROLLERATE OF INSPECTION (HEAVY VEHICLES) AVADI

TITLE:- COUPLING

D S CAT NUMBER

DRAWING NUMBER 92-1106-222

F-12a

SIZE A2

DRAWING NUMBER
92 1106 230

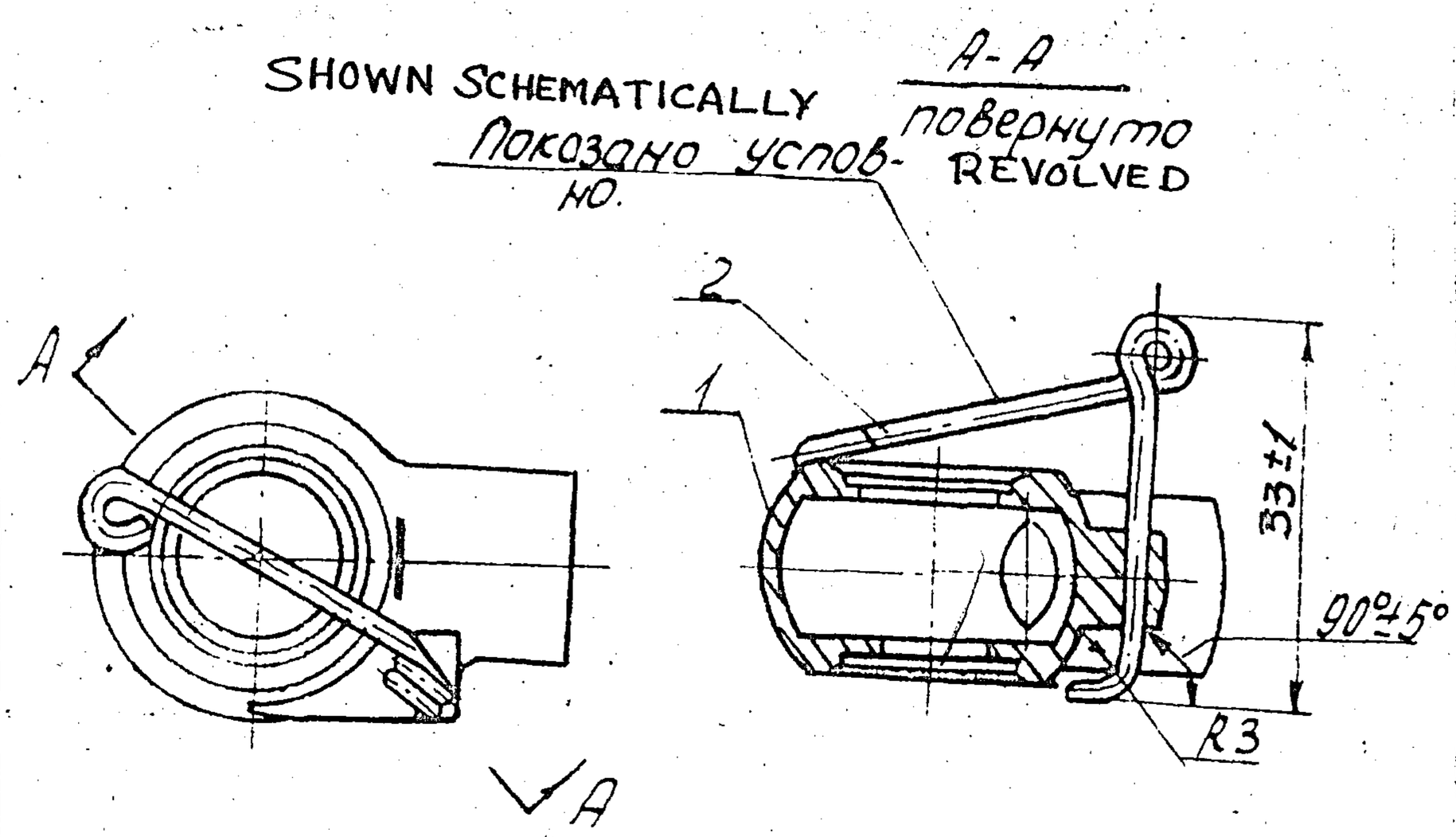

F.12a

PILOT SAMPLE SHOULD BE APPROVED BY A H S P BEFORE BULK PRODUCTION

ISSUE	DATE	NATURE OF AMENDMENTS

EST. WT. 79 g

TO BE STAMPED OR MARKDD WHERE INDICATED THUS # (LETTERS)

ALL SHARP EDGES AND CORNERS TO BE REMOVED UNLESS OTHERWISE STATED MACHINED CORNERS TO HAVE R OUTSIDE R INSIDE EQUIVALENT CHAMFERS ARE PERMISSIBLE

MATERIAL: —

USED ON: СБ 332-00-11, 92-1106-010-СБ

DRN
CHD
TCD
APPD
DATE 05/6/86

SCALE: 2 : 1

DIMENSIONS IN mm

TOLERANCE ON DIMNS UNLESS OTHERWISE STATED

ALL THREADS TO CONFORM TO

CONTROLLERATE OF INSPECTION (HEAVY VEHICLES) AVADI

TITLE: SUB ASSY SWIVEL NIPPLE

D S CAT NUMBER

DRAWING NUMBER 92 1106 230

SIZE A4

DRAWING NUMBER
92 1106 231

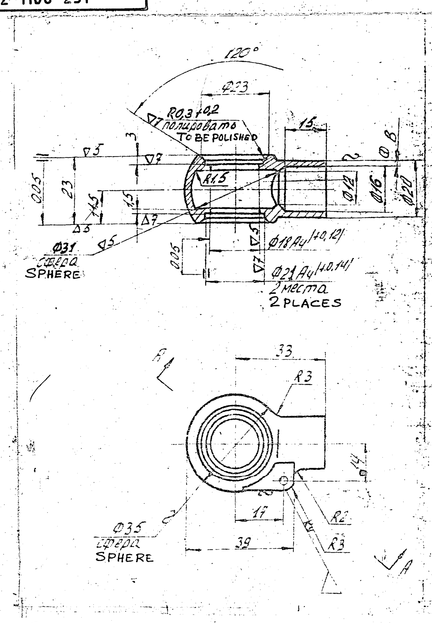

допуски на свободные размеры по 22 АТ 52
Допуски на штамповочные размеры по нормали 555-65 класс точности 5 (АН-1985).

TOLERANCES FOR FREE DIMENSIONS - AS PER 22 AT 52. TOLERANCE FOR STAMPING DIMENSIONS AS PER STANDARD 555-65 ACCURACY CLASS 5 (AH-1985)

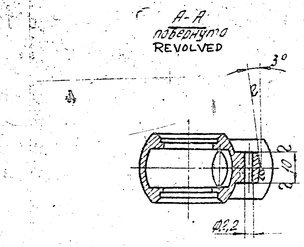

1. HRC 20 - 30
2. THE COMPONENTS MAY BE MANUFACTURED FROM STEEL 20 GOST 1050-74.
3. DIMENSION "B" SHOULD BE 1.4mm MINIMUM.

EXPLANATORY NOTE:

REFERENCE MATERIAL QUOTED.

a. CARBON STRUCTURAL, HOT ROLLED STEEL, GRADE 45 AND REFERENCE NOTE 2 ON ALTERNATE MATERIAL STEEL GRADE 20 TO GOST 1050-74.

b) CHEMICAL COMPOSITION:

GRADE OF STEEL	CONTENT OF ELEMENTS %						REMARKS
	C	Si	Mn	Cr	S	P	
				MAXIMUM			
45	0.42 0.50	0.17 0.37	0.50 0.80	0.25	0.040	0.035	REF. MATL
20	0.17 0.24	0.17 0.37	0.35 0.65	0.25	0.040	0.035	ALT. MATL.

RESIDUAL CONTENTS OF COPPER AND NICKEL SHOULD NOT EXCEED 0.25% EACH.

b) MECHANICAL PROPERTIES AS PER NORMALISED CONDITION.

GRADE OF STEEL	ULTIMATE TENSILE STRENGTH Kgf/mm²	YIELD POINT Kgf/mm²	ELONGATION %	REDUCTION IN AREA %	IMPACT STRENGTH Kgfm/cm²	REMARKS
45	51	36	16	40	5	Ref.Matl
20	42	25	25	55	—	Alt.Matl

PILOT SAMPLE SHOULD BE APPROVED BY A H S P BEFORE BULK PRODUCTION.

EST. MASS	TO BE STAMPED OR MARKED WHERE INDICATED THUS # (LETTERS)
75 g	

ALL SHARP EDGES AND CORNERS TO BE REMOVED UNLESS OTHERWISE STATED MACHINED CORNERS TO HAVE R OUTSIDE R INSIDE EQUIVALENT CHAMFERS ARE PERMISSIBLE.

ISSUE	DATE	NATURE OF AMENDMENTS

DRN
CHD
TCD
APPD
DATE
SCALE - 1 : 1
DIMENSIONS IN mm
TOLERANCE ON DIMNS UNLESS OTHERWISE STATED.
ALL THREADS CONFORM TO

MATERIAL STEEL 45
GOST 1050-74
USED ON: 92 1106 230
CONTROLLERATE OF INSPECTION (HEAVY VEHICLES) AVADI
TITLE: SWIVEL NIPPLE
D S CAT NUMBER
DRAWING NUMBER 92 1106 231

F.12a
SIZE A2

92-1106-231

DRAWING NUMBER
92 1106 010 СБ

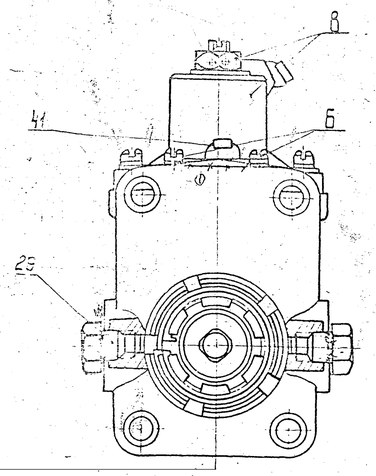

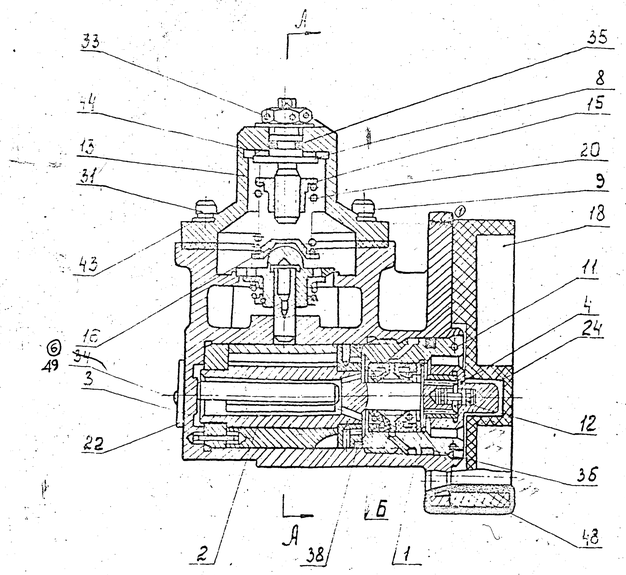

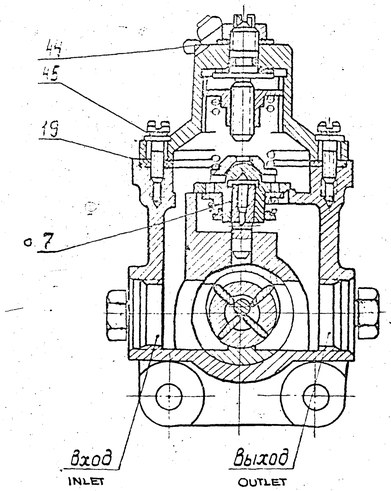

1. REDUCING VALVE OF ASSEMBLY 7 SHOULD BE LAPPED TO SUIT THE PLACE.
2. SUPPORT 18 SHOULD BE FASTENED TO THE PUMP WITH WIRE AT 2 PLACES.
3. THE DIRECTION OF ROTATION, AS SEEN FROM THE SIDE OF DRIVE, IS LEFT HAND.
4. SHAFT END SHOULD BE CHECKED FOR SMOOTH ROTATION BY HAND IN BOTH DIRECTIONS. THE ROTATION SHOULD BE SMOOTH WITHOUT JAMMING AND SEIZING.
5. THE COMPONENTS SHOULD BE WIRE-LOCKED IN SUCH A DIRECTION AS TO PRESENT THEM FROM UNSCREWING. THE SEALS AND ENDS OF WIRE SHOULD BE BENT AND SECURED.
6. SPACE "Б" SHOULD BE FILLED WITH LUBRICANT SIATIM 201 GOST 6267-74.
7. PLACES "Б" AND "В" SHOULD BE LOCKED WITH WIRE AND SEALED. THE COMPONENTS SHOULD BE WIRE-LOCKED IN SUCH A DIRECTION AS TO PRESENT THEM FROM UNSCREWING.
8. DURING DISMOUNTLING OF ASSEMBLY 4, IT IS PERMITTED TO REPLACE RINGS 42. (8)
9. PROJECTING THREADED PORTIONS OF STUDS, UNION NUT SIDES, END CAPS, RIVETS, PLATE, SEALS, AND LOCKWIRE OF THE FINALLY ASSEMBLED PUMPS SHOULD BE COATED WITH LACQUER УР-231 МРТУ6-10-863-89.84 (5)
10. THE ARTICLE IS TO BE TRANSPORTED WITH REMOVED COMPONENTS 27, 5, 6, 39. PLACES "INLET" AND "OUTLET" SHOULD BE PLUGGED BY END CAP 30, PACKING RING 39 SHOULD BE INSTALLED.

Штуцер входа
INLET UNION

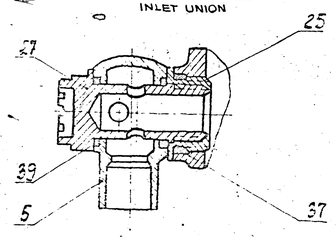

Штуцер выхода
OUTLET UNION

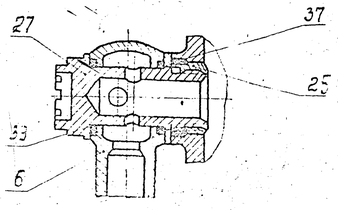

PILOT SAMPLE SHOULD BE APPROVED BY A H S P BEFORE BULK PRODUCTION.

EST. MASS	TO BE STAMPED OR MARKED WHERE INDICATED THUS # (LETTERS)
1,25 Kg	

ALL SHARP EDGES AND CORNERS TO BE REMOVED UNLESS OTHERWISE STATED MACHINED CORNERS TO HAVE R OUTSIDE R INSIDE EQUIVALENT CHAMFERS ARE PERMISSIBLE.

ISSUE	DATE	NATURE OF AMENDMENTS
8	24-7-93	AUTHY. НТП 46-128-88АИ
7	20-7-93	AUTHY. НТП 46-128-88
6	16-7-93	AUTHY. НТП 46-128-88
5	12-6-93	AUTHY. НТП 46-84-87

DRN
CHD
TCD
APPD
DATE 12/10

MATERIAL:- —

USED ON:- Cb 3335 00 24

CONTROLLERATE OF INSPECTION (HEAVY VEHICLES) AVADI

SCALE - 1 : 1.
DIMENSIONS IN mm.
TOLERANCE ON DIMNS UNLESS OTHERWISE STATED.
ALL THREADS CONFORM TO

TITLE:- ASSY BOOSTER PUMP НТП 46

D S CAT NUMBER

DRAWING NUMBER 92 1106 010 СБ

SIZE A1

BP-5

F-12a

DRAWING NUMBER
92 1106 010ГЧ

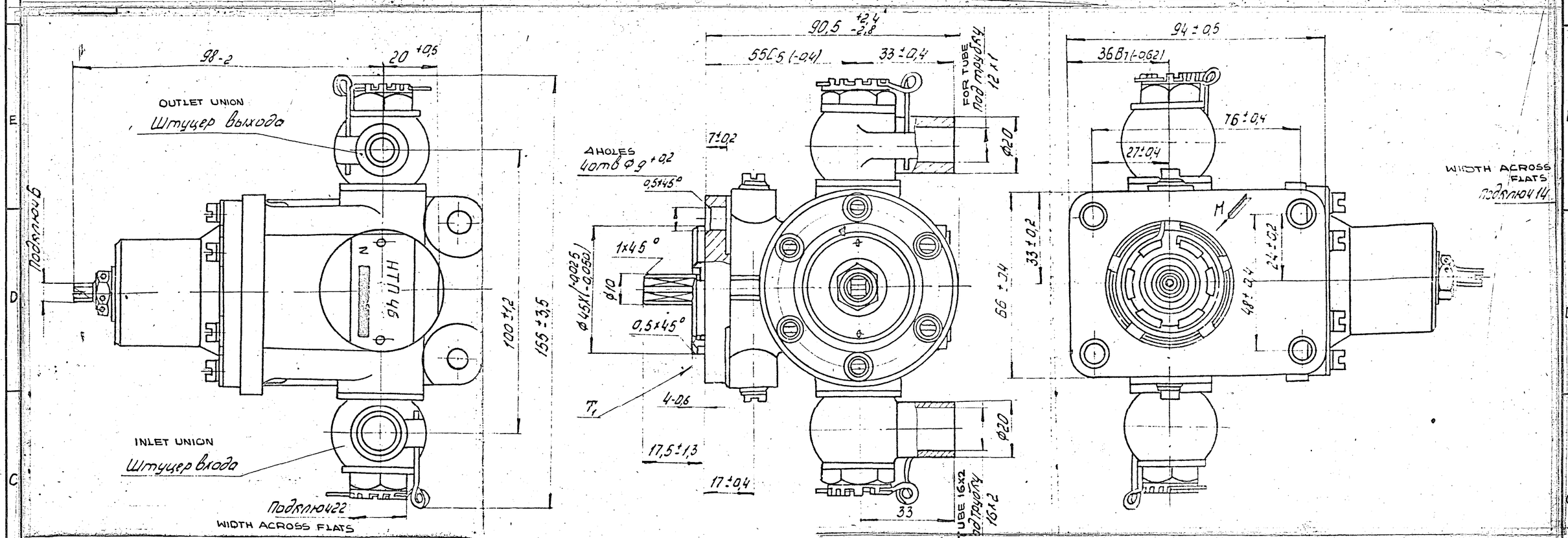

1. TOTAL RUN OUT OF SQUARE PORTION OF COUPLING OF MOTOR DRIVE TO THE PUMP RELATIVE TO THE CENTERING RECESS, INCLUDING THE SKEWNESS OF DRIVE AXIS RELATIVE TO THE MOUNTING SURFACE SHOULD NOT EXCEED 0.1mm.
2. SINKING OF FACE "T" RELATIVE TO FACE "T1" SHOULD BE 1mm., MINIMUM.

PILOT SAMPLE SHOULD BE APPROVED BY A H S P BEFORE BULK PRODUCTION.

EST. MASS	TO BE STAMPED OR MARKED WHERE INDICATED THUS # (LETTERS)
1,25 Kg	

ALL SHARP EDGES AND CORNERS TO BE REMOVED UNLESS OTHERWISE STATED MACHINED CORNERS TO HAVE R OUTSIDE R. INSIDE EQUIVALENT CHAMFERS ARE PERMISSIBLE.

ISSUE	DATE	NATURE OF AMENDMENTS

DRN		MATERIAL:- —
CHD		USED ON:- Cb 3335 00 26
TCD		
APPD		CONTROLLERATE OF INSPECTION (HEAVY VEHICLES) AVADI
DATE		
SCALE - 1 : 1		
DIMENSIONS IN mm.		TITLE:- BOOSTER PUMP OUT LINE
TOLERANCE ON DIMNS UNLESS OTHERWISE STATED.		
ALL THREADS CONFORM TO		D S CAT NUMBER / DRAWING NUMBER 92 1106 010ГЧ

BP-6

F-12a

SIZE A2

DRAWING NUMBER
92 1106 180

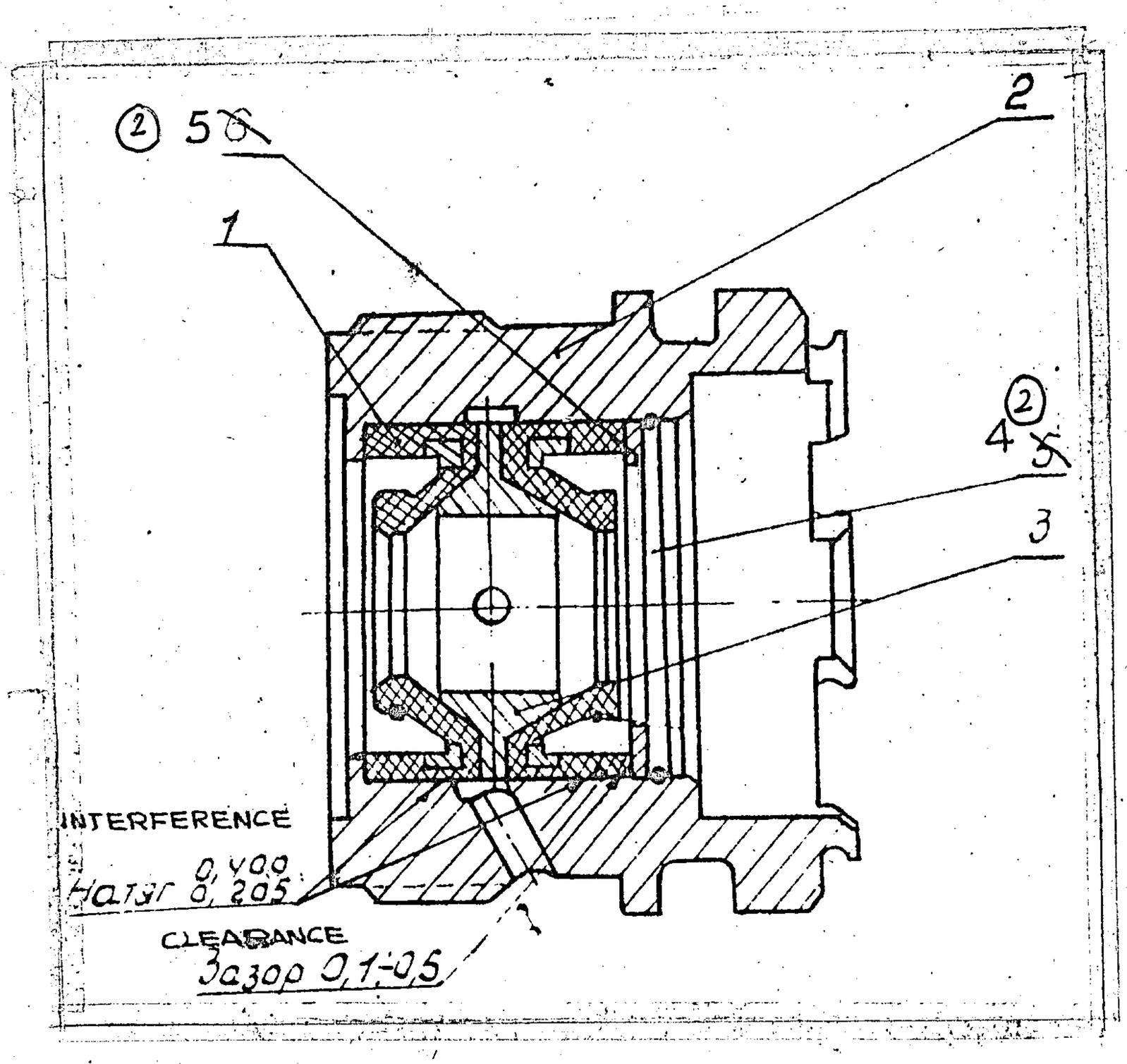

F-12A

PILOT SAMPLE SHOULD BE APPROVED BY A H S P BEFORE BULK PRODUCTION

2	31-5-93	AUTHY. NOTN. NO. HTM 46-112-88.	
ISSUE	DATE	NATURE OF AMENDMENTS	

EST WT 66 gm

TO BE STAMPED OR MARKED WHERE INDICATED THUS # (LETTERS)

ALL SHARP EDGES AND CORNERS TO BE REMOVED UNLESS OTHERWISE STATED MACHINED CORNERS TO HAVE R OUTSIDE R INSIDE EQUIVALENT CHAMFERS ARE PERMISSIBLE.

MATERIAL —

USED ON 92 1106 010 CB

DRN

CHD

TCD

APPD

DATE 11/6

SCALE 2 : 1

DIMENSIONS IN mm

TOLERANCE ON DIMNS UNLESS OTHERWISE STATED

ALL THREADS CONFORM TO

CONTROLLERATE OF INSPECTION (HEAVY VEHICLES) AVADI

TITLE
SUB ASSY OIL SEAL NUT

D S CAT NUMBER

DRAWING NUMBER
92 1106 180

SIZE A4

DRAWING NUMBER
92-1106-181

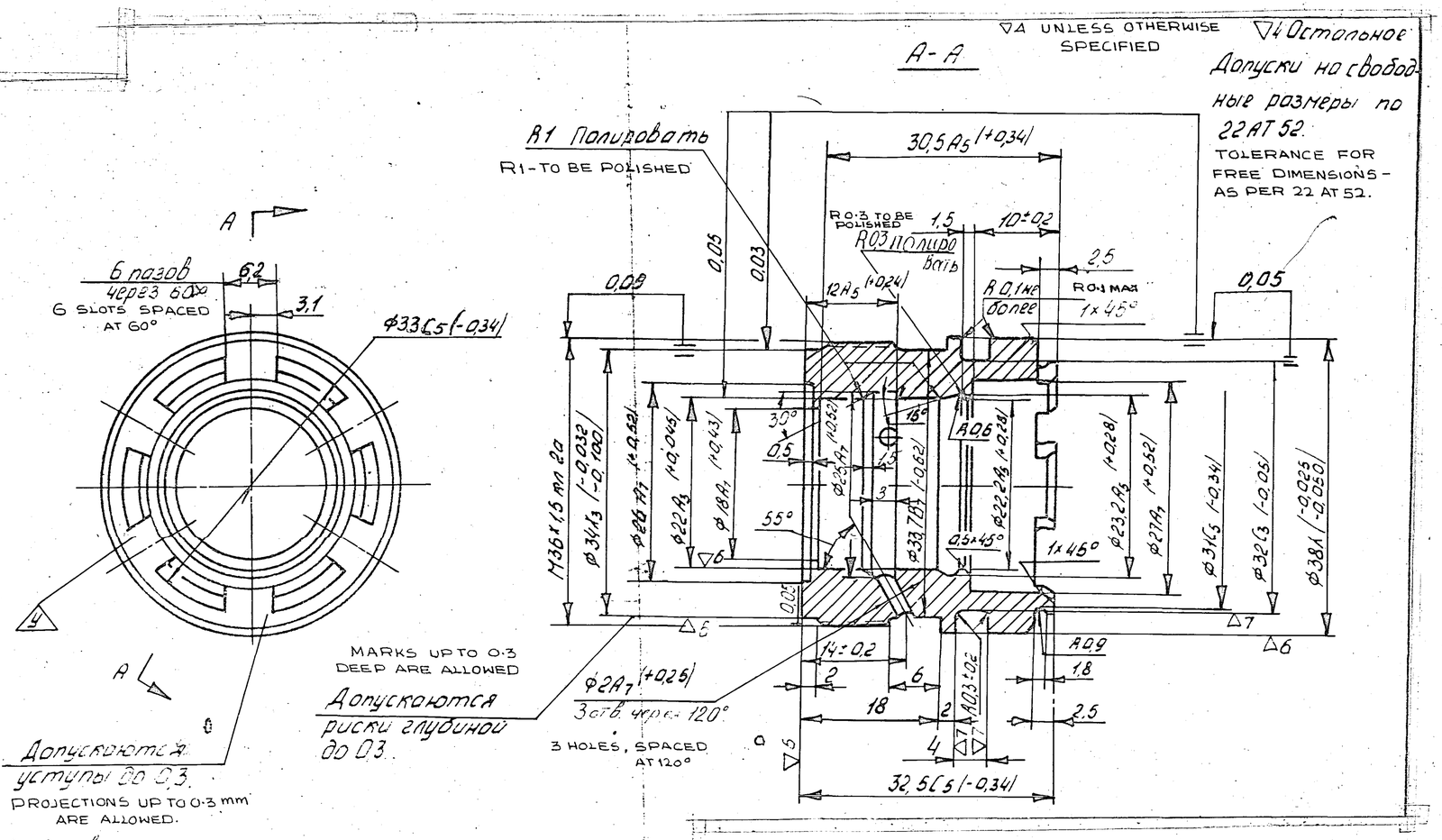

1. Анодировать.
2. Расположение пазов относительно отверстий произвольное.
3. Фаски по 299АТ

1. TO BE ANODIZED.
2. THE POSITION OF SLOTS RELATIVE TO THE HOLES IS ARBITRARY.
3. CHAMFERS AS PER 299 AT.

PILOT SAMPLE SHOULD BE APPROVED BY A H S P BEFORE BULK PRODUCTION.

EST. MASS	TO BE STAMPED OR MARKED WHERE INDICATED THUS # (LETTERS)
45 gm	

ALL SHARP EDGES AND CORNERS TO BE REMOVED UNLESS OTHERWISE STATED MACHINED CORNERS TO HAVE R OUTSIDE R INSIDE EQUIVALENT CHAMFERS ARE PERMISSIBLE.

ISSUE	DATE	NATURE OF AMENDMENTS

DRN		MATERIAL:- ALUMINIUM ALLOY Д16Т GOST 21488-76
CHD		USED ON:- 92-1106-180-СБ
TCD		CONTROLLERATE OF INSPECTION (HEAVY VEHICLES) AVADI
APPD		
DATE		
SCALE : 2 : 1		
DIMENSIONS IN mm.		TITLE:- NUT
TOLERANCE ON DIMNS UNLESS OTHERWISE STATED.		
ALL THREADS CONFORM TO		D S CAT NUMBER
		DRAWING NUMBER 92-1106-181

.12a
E A2

DRAWING NUMBER
92 1106 182

▽5 UNLESS OTHERWISE SPECIFIED

TOLERANCE FOR FREE

DIMENSIONS AS PER 22 AT 52

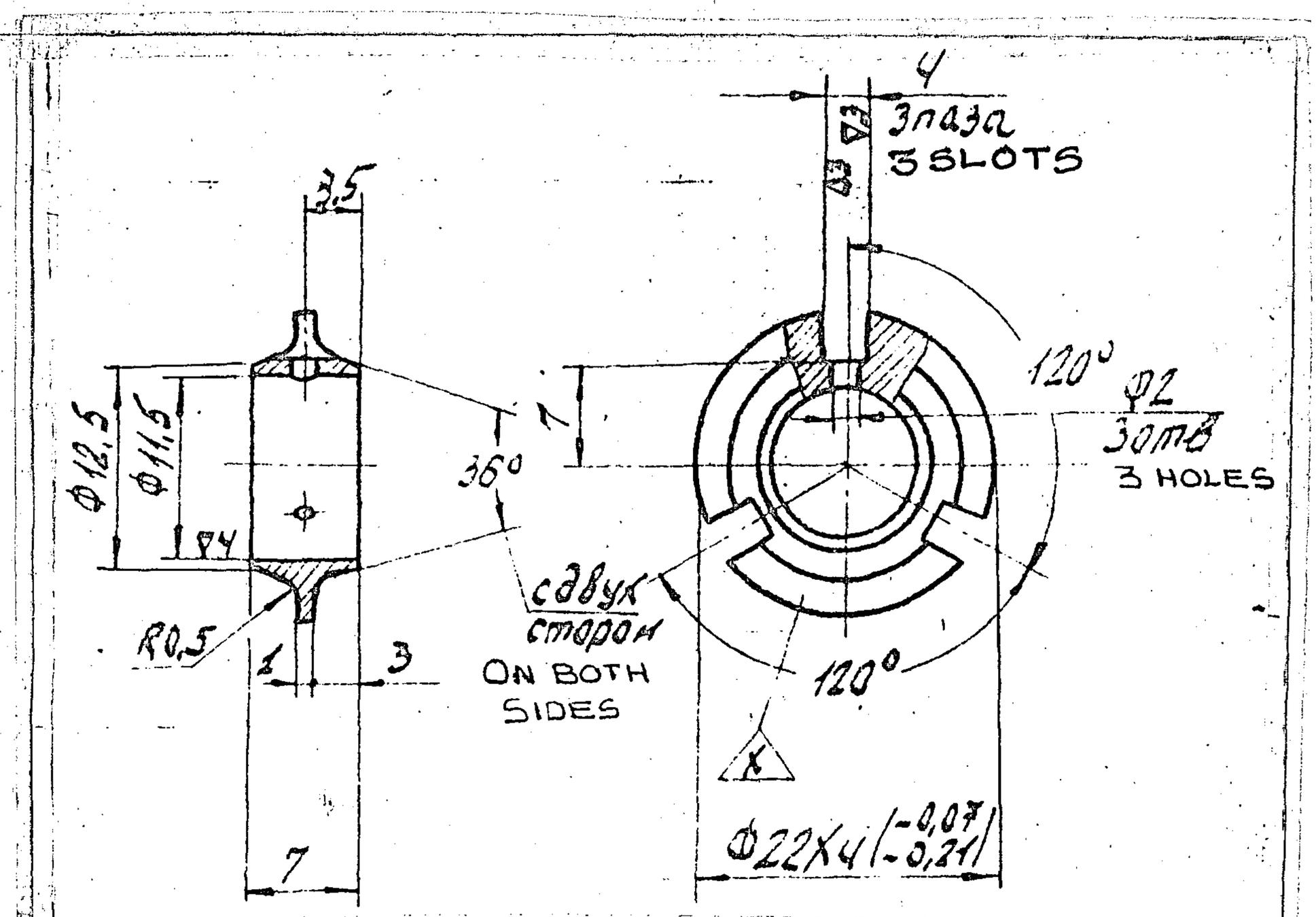

1 TO BE ANODIZED.

PILOT SAMPLE SHOULD BE APPROVED BY A H S P BEFORE BULK PRODUCTION

ISSUE	DATE	NATURE OF AMENDMENTS	EST WT 15 g	TO BE STAMPED OR MARKED WHERE INDICATED THUS ⊣⊢ (LETTERS)
			ALL SHARP EDGES AND CORNERS TO BE REMOVED UNLESS OTHERWISE STATED MACHINED CORNERS TO HAVE R OUTSIDE R INSIDE EQUIVALENT CHAMFERS ARE PERMISSIBLE.	
			MATERIAL ALUMINIUM ALLOY A16 T GOST 21480-76	USED ON 92 1106 100
DRN		SCALE 2 : 1	CONTROLLERATE OF INSPECTION (HEAVY VEHICLES) AVADI	
CHD		DIMENSIONS IN mm		
TCD		TOLERANCE ON DIMNS UNLESS OTHERWISE STATED	TITLE DRAIN RING	
APPD		ALL THREADS CONFORM TO	D S CAT NUMBER	DRAWING NUMBER 92 1106 182
DATE				

SIZE A4

92-1106-183

DRAWING NUMBER
92-1106-183

~ ALL OVER

TOLERANCE FOR FREE DIMENSIONS-
AS PER ACCURACY CLASS 7

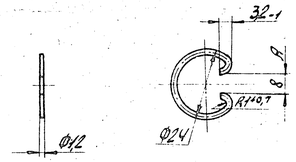

1. HEAT TREATMENT - TEMPERING.
2. BURRS SHOULD BE DRESSED.
3. INCREASE OF DIEMNSION "A" TO A WIDTH OF8 $^{+3}$ mm IS ALLOWED.
4. ELLIPTICITY OF Ø24 IS ALLOWED WITHIN TOLERANCE ON INCREASE OF DIMENSION A.
5. LENGTH OF STRAIGHTENED BLANK 72 mm.
6. COATING: Cd 9, CHROMATIZING.

F-12a

PILOT SAMPLE SHOULD BE APPROVED BY A H S P BEFORE BULK PRODUCTION

EST WT 0,70 gm	TO BE STAMPED OR MARKED WHERE INDICATED THUS ⊕ (LETTERS)
ALL SHARP EDGES AND CORNERS TO BE REMOVED UNLESS OTHERWISE STATED MACHINED CORNERS TO HAVE R OUTSIDE R INSIDE EQUIVALENT CHAMFERS ARE PERMISSIBLE.	
MATERIAL :STEEL WIRE II A-1.2 GOST 9389-75	USED ON 92-1106-100-СБ
CONTROLLERATE OF INSPECTION (HEAVY VEHICLES) AVADI	
TITLE RING RETAINING	
D S CAT NUMBER	DRAWING NUMBER 92-1106-183

ISSUE	DATE	NATURE OF AMENDMENTS

DRN
CHD
TCD
APPD
DATE

SCALE : 1 : 1
DIMENSIONS IN mm
TOLERANCE ON DIMNS UNLESS OTHERWISE STATED
ALL THREADS CONFORM TO

SIZE A4

DRAWING NUMBER
92 1106 190

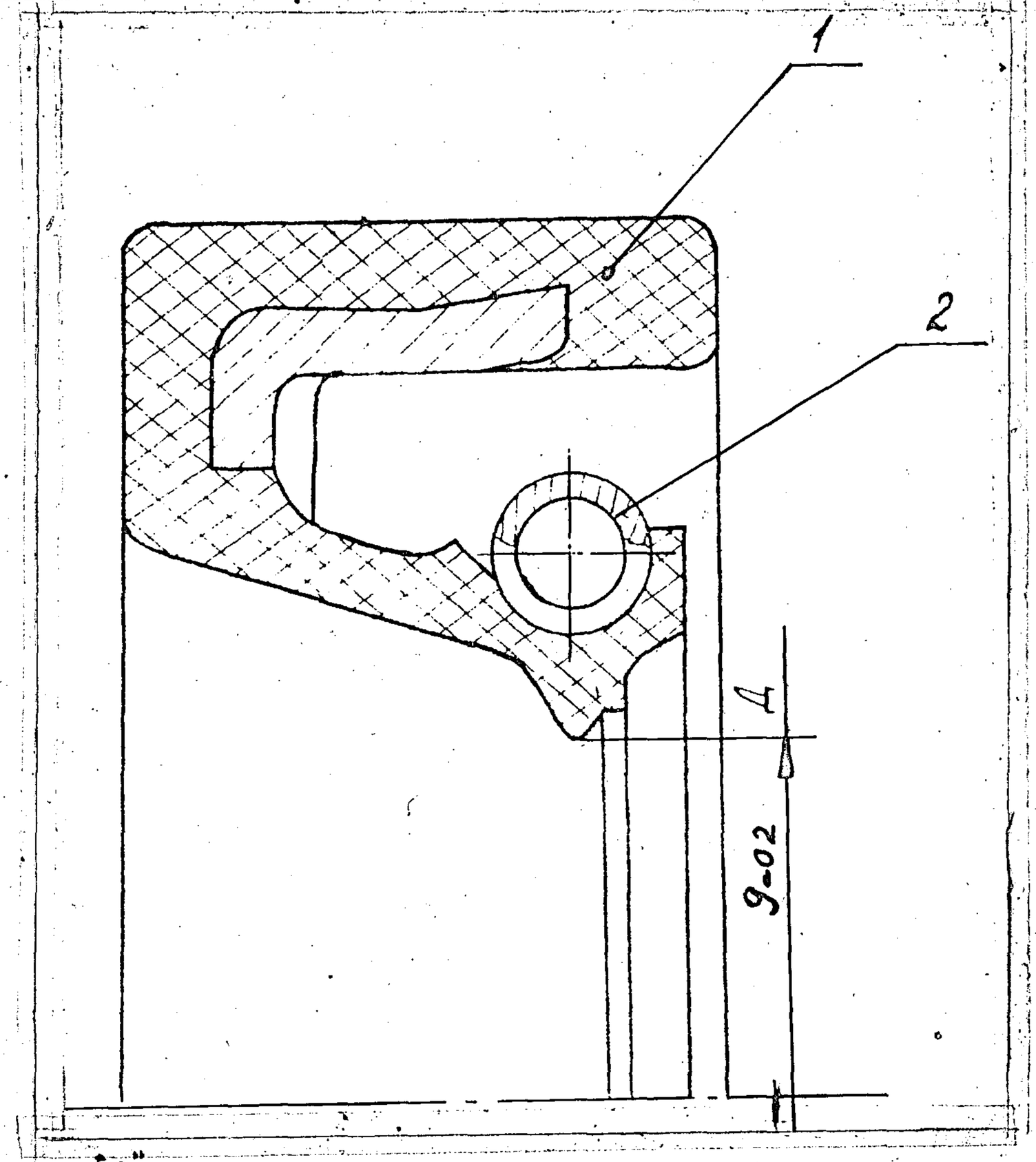

DIMENSION "A" SHOULD BE ENSURED BY SELECTION OF COMPONENT 2.

PILOT SAMPLE SHOULD BE APPROVED BY A H S P BEFORE BULK PRODUCTION

			EST WT 3.18 gm	TO BE STAMPED OR MARKED WHERE INDICATED THUS ⊥ (LETTERS)
			ALL SHARP EDGES AND CORNERS TO BE REMOVED UNLESS OTHERWISE STATED MACHINED CORNERS TO HAVE R OUTSIDE R INSIDE EQUIVALENT CHAMFERS ARE PERMISSIBLE.	
			MATERIAL —	USED ON 92 1106 100
ISSUE	DATE	NATURE OF AMENDMENTS		
DRN		SCALE 10 : 1	CONTROLLERATE OF INSPECTION (HEAVY VEHICLES) AVADI	
CHD		DIMENSIONS IN mm		
TCD		TOLERANCE ON DIMNS UNLESS OTHERWISE STATED	TITLE SUB ASSY OIL SEAL	
APPD		ALL THREADS CONFORM TO	D S CAT NUMBER	DRAWING NUMBER 92 1106 190
DATE 11.86				

F12a

SIZE A4

92 - 1106 - 192

DRAWING NUMBER
92-1106-192

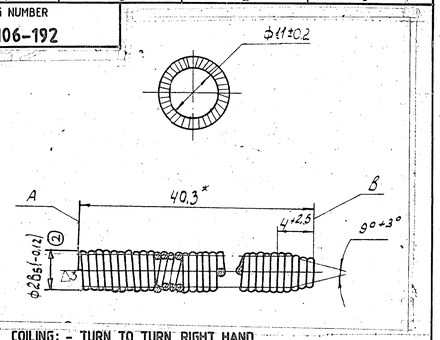

1. COILING: - TURN TO TURN, RIGHT HAND.
2. THE SPRING SHOULD BE BENT IN THE FORM OF A RING. END 'B' SHOULD BE SCREWED INTO END "A" AS FAR AS IT WILL GO.
3. TO BE MARKED ON A TAG.
4. COATING: CHEMICAL OXIDIZING.
5. * DIMENSION FOR REFERENCE.

F-12a

PILOT SAMPLE SHOULD BE APPROVED BY A H S P BEFORE BULK PRODUCTION

3	1-6-93	AUTHY. NOTN. NO. HTTA46-108-88	
2	31-5-93	AUTHY. NOTN. NO. HTTA46-30-87	
ISSUE	DATE	NATURE OF AMENDMENTS	
DRN		SCALE —	
CHD		DIMENSIONS IN mm	
TCD		TOLERANCE ON DIMNS UNLESS OTHERWISE STATED	
APPD		ALL THREADS CONFORM TO	
DATE			

EST WT 0.00038 (3)

TO BE STAMPED OR MARKED WHERE INDICATED THUS * (LETTERS)

ALL SHARP EDGES AND CORNERS TO BE REMOVED UNLESS OTHERWISE STATED MACHINED CORNERS TO HAVE R OUTSIDE R INSIDE EQUIVALENT CHAMFERS ARE PERMISSIBLE.

MATERIAL: WIRE II A-0,3 GOST 9389-75

USED ON 92-1106-190-CB

CONTROLLERATE OF INSPECTION (HEAVY VEHICLES) AVADI

TITLE SPRING OIL SEAL

D S CAT NUMBER

DRAWING NUMBER 92-1106-192

SIZE A4

DRAWING NUMBER
92 1106 200

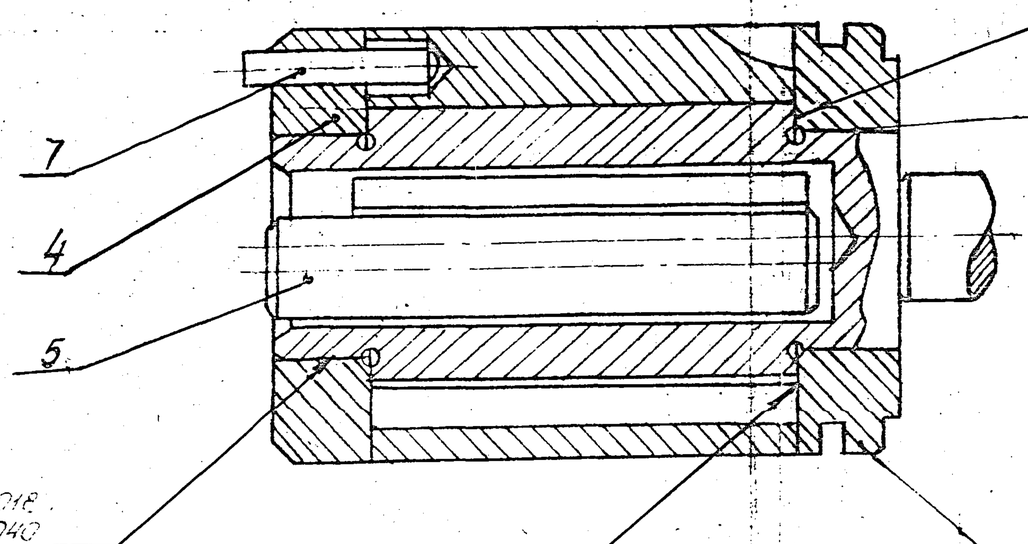

ASSEMBLY CLEARANCE
Монтажный зазор 0,020 / 0,040 (ротор)
(ROTOR)
зазор 0,018 / 0,040
справочный
REFERENCE CLEARANCE

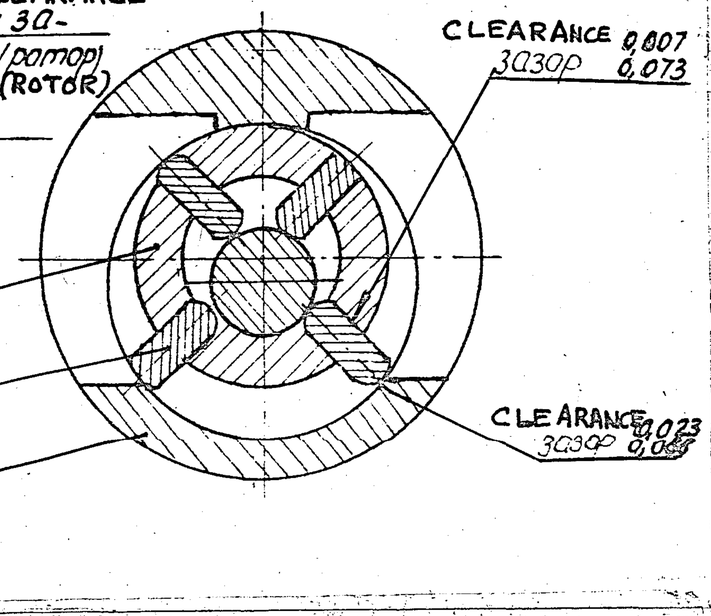

CLEARANCE 0,007 / 0,073
зазор
CLEARANCE 0,023
зазор 0,0[illegible]

зазор 0,018 / 0,040
справочный
REFERENCE CLEARANCE

Монтажный
зазор 0,01 / 0,03 / пластина /
обеспечить подбором.
ASSEMBLY CLEARANCE 0,01 / 0,03 (PLATE)
SHOULD BE ENSURED BY SELECTION

WITH PUMPING ASSEMBLY OPERATING WITHOUT FUEL AND ROTOR SPEED BEING 1750 r/min. EXPANSION PRESSURE OF 200 mm Hg SHOULD BE ENSURED BY SELECTION ASSEMBLY.

PILOT SAMPLE SHOULD BE APPROVED BY A H S P BEFORE BULK PRODUCTION.

EST. MASS	TO BE STAMPED OR MARKED WHERE INDICATED THUS ⊕
276 g	(LETTERS)

ALL SHARP EDGES AND CORNERS TO BE REMOVED UNLESS OTHERWISE STATED MACHINED CORNERS TO HAVE R OUTSIDE R INSIDE EQUIVALENT CHAMFERS ARE PERMISSIBLE.

ISSUE	DATE	NATURE OF AMENDMENTS

DRN		
CHD		
TCD		
APPD		
DATE		
SCALE:- 2 : 1		
DIMENSIONS IN mm.		
TOLERANCE ON DIMNS UNLESS OTHERWISE STATED.		
ALL THREADS CONFORM TO		

MATERIAL:- —

USED ON:- 92 1106 010 Cb

CONTROLLERATE OF INSPECTION (HEAVY VEHICLES) AVADI

TITLE:- SUB ASSY ROTOR

D S CAT NUMBER

DRAWING NUMBER 92 1106 200

A3

DRAWING NUMBER

92-1106-201

▽3 UNLESS OTHERWISE STATED

TOLERANCE FOR FREE DIMENSIONS AS PER ACCURACY CLASS 7.

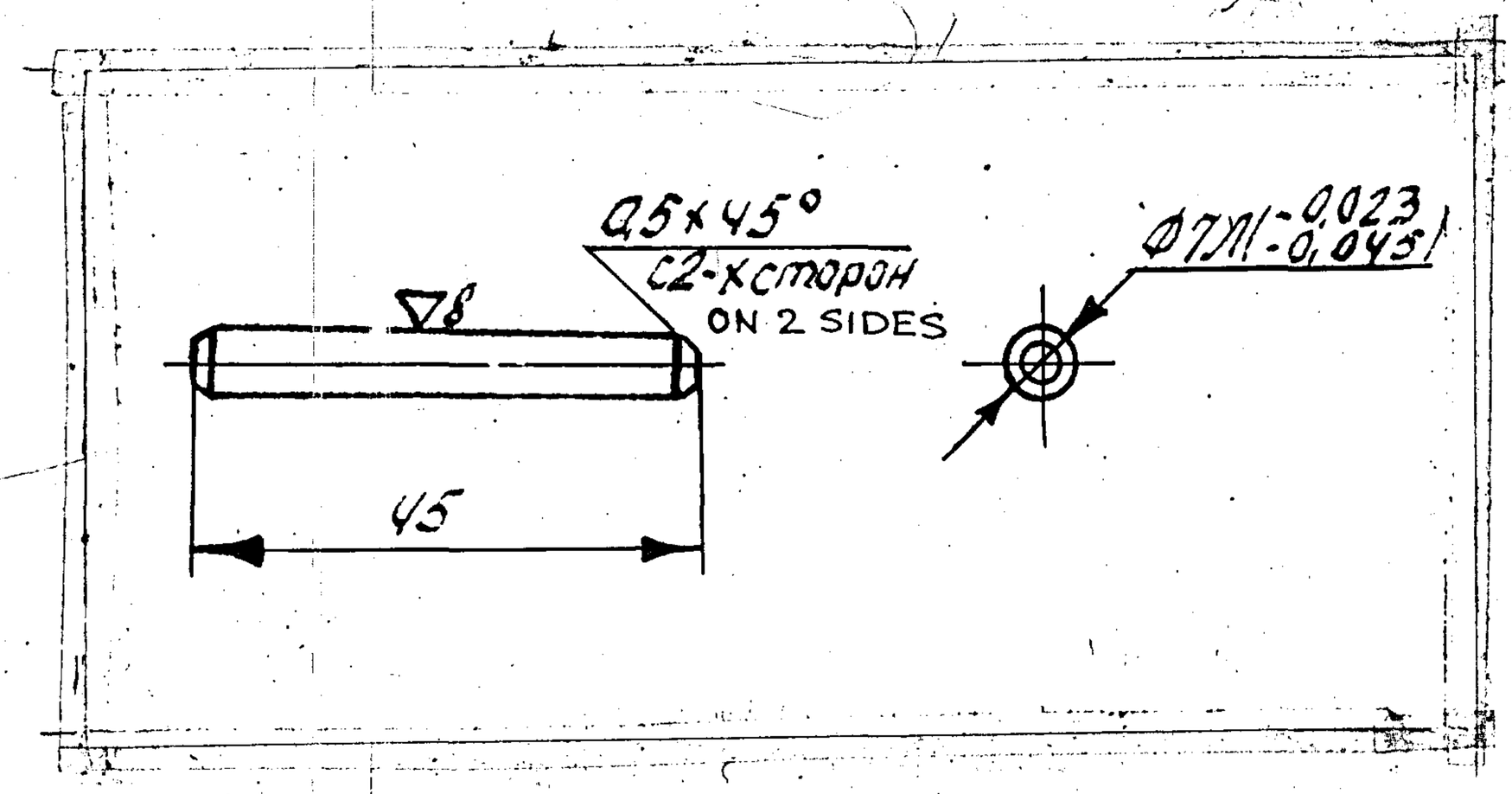

1. TO BE HEAT TREATED HRC 52-56
2. THE CORNERS SHOULD BE ROUNDED OFF TO R 0.3.
3. TO BE OXIDIZED.

(1A) EQUIVALENT MATERIAL
STEEL 535A99 (EN 31) TO BS:970/103
CR 2 TO IS 4398-72

F-12a

PILOT SAMPLE SHOULD BE APPROVED BY A H S P BEFORE BULK PRODUCTION

ISSUE	DATE	NATURE OF AMENDMENTS
1A	10-7-10	4th ALT.COMM. Mtg. MINUTES POINT No 8 DT. 26-10-09
1	31-5-93	AUTHY.NDTN.NO.HT1146-84-87.

EST WT 13.5 g

TO BE STAMPED OR MARKED WHERE INDICATED THUS # (LETTERS)

ALL SHARP EDGES AND CORNERS TO BE REMOVED UNLESS OTHERWISE STATED MACHINED CORNERS TO HAVE R OUTSIDE R INSIDE EQUIVALENT CHAMFERS ARE PERMISSIBLE.

MATERIAL: STEEL 40 x 15 GOST 801-~~80~~ 78 (1)

USED ON: 92-1106-200 СБ

DRN

CHD

TCD

APPD

DATE 12/6

SCALE : 1 : 1

DIMENSIONS IN mm

TOLERANCE ON DIMNS UNLESS OTHERWISE STATED

ALL THREADS CONFORM TO

CONTROLLERATE OF INSPECTION (HEAVY VEHICLES) AVADI

TITLE: PIN FLOATING.

D S CAT NUMBER

DRAWING NUMBER: 92-1106-201

SIZE A4